INCH-POUND

MIL-STD-1366E
31 October 2006
SUPERSEDING
MIL-STD-1366D
18 December 1998

DEPARTMENT OF DEFENSE

INTERFACE STANDARD FOR TRANSPORTABILITY CRITERIA

AMSC NO A7616 AREA PACK

DISTRIBUTION STATEMENT A. Approved for public release; Distribution is unlimited.

FOREWORD

1. This interface standard is approved for use by all Departments and Agencies of the Department of Defense.

2. In addition to updating data contained in the previous version, this version incorporates characteristics of new transporters such as the C-130J/J-30 aircraft, TSV, and LCAC landing craft. We have also included more detailed information concerning transport in Air Force cargo aircraft, and updated additional transportation asset characteristics.

3. Comments, suggestions, or questions on this document should be addressed to Director, Military Surface Deployment and Distribution Command Transportation Engineering Agency (SDDCTEA), ATTN: SDTE-DPE, 720 Thimble Shoals Blvd, Suite 130, Newport News, VA 23606-4537 or emailed to DPEmail@tea.army.mil. Since contact information can change, you may want to verify the currency of this address information using the ASSIST Online database at http://assist.daps.dla.mil.

Table of Contents

1. SCOPE 1
1.1 General. 1
1.2 Applicability. 1
1.3 Measurement units. 1

2. APPLICABLE DOCUMENTS 1
2.1 General. 1
2.1.1. Specifications and standards. 1
2.1.2 Other Government documents, drawings and publications. 2
2.2 Non-Government publications. 4
2.3 Order of Precedence. 5

3. DEFINITIONS 5
3.1 Airdrop (air delivery). 5
3.2 Athwartship. 5
3.3 Basic Issue Item (BII). 5
3.4 Breakbulk general-cargo ships. 6
3.5 Cargo tiedown provision. 6
3.6 Circus loading method. 6
3.7 Combat developer (CBTDEV). 6
3.8 CONUS. 6
3.9 Curb weight. 6
3.10 Cushioned draft gear railcar. 6
3.11 Deck loading. 7
3.12 Defense transportation system (DTS) 7
3.13. Deployability. 7
3.14 Deployability engineering. 7
3.15 Equipment tiedown provision. 7
3.16 Extraction parachutes. 7
3.17 Flatrack. 7
3.18 Floor contact pressure. 7
3.19 Fragile item. 7
3.20 Gross weight. 7
3.21 Hazardous material. 8
3.22 Heavy vehicles. 8
3.23 Internal aerial delivery. 8
3.43 Spreader bars. 10
3.44 Standard draft gear railcar. 10
3.45 Strategic deployment. 11
3.46 Tactical deployment. 11
3.47 Transportability. 11

3.48 Transportability approval. 11
3.49 Transportability engineering. 11
3.50 Transportability engineering analysis. 11
3.51 Transportability report. 11
3.52 'Tween-deck. 11
3.53 Vehicle payload. 12
3.54 Watertight. 12
3.55 Weathertight. 12

4.0 GENERAL REQUIREMENTS 12
4.1 Transportability Criteria. 12
4.2 DOD Engineering for Transportability and Deployability Program. 13
4.3 Transportability design responsibilities. 13
4.4 Transportability problem item. 13
4.5 Management of transportability problem items. 14
4.6 Hazardous materials packaging and transportation requirements. 14

5. DETAILED REQUIREMENTS 14
5.1 Highway Transportation. 14
5.1.2 CONUS Highways. 14
5.1.2.1 Unrestricted transport. 14
5.1.2.2 U.S. Federal Bridge Gross Weight formula. 15
5.1.2.3 The National Network. 16
5.1.2.4 U.S. highway permit limits. 16
5.1.2.5 Certification Essential to National Defense. 16
5.1.2.6 Safety. 17
5.1.3 Foreign highways. 17
5.1.4 Military Load Classification (MLC). 18
5.1.5 Determining crew weights. 18
5.1.6 Cargo restraint requirements. 19

5.2 Rail Transportation. 20
5.2.1 General. 20
5.2.2 North American rail. 21
5.2.2.1 Railcar availability. 21
5.2.2.2 Unrestricted transport. 21
5.2.2.3 CONUS transport for equipment exceeding the AAR diagram. 26
5.2.2.4 Typical vehicle loading on flatcars. 26
5.2.3 Foreign Rail. 26
5.2.3.1. NATO railcar availability. 26
5.2.3.2 NATO Rail. 29
5.2.3.3 NATO rail transport on major rail lines. 31
5.2.3.4 Other foreign rail clearances. 31
5.2.4 Comparison of loading diagrams. 31
5.2.5 Rail impact testing. 31

5.3 Water Transportation. *35*
5.3.1 General. 35
5.3.2 Breakbulk general-cargo ships. 36
5.3.3 Containerships. 36
5.3.3.1 General. 36
5.3.3.2 Full containerships. 36
5.3.4 Combination ships. 38
5.3.5 Barge Carriers 38
5.3.5.1 General. 38
5.3.5.2 LASH. 38
5.3.5.3 LASH Lighters (barges). 38
5.3.5.4 SEABEE. 40
5.3.6 Roll-on/roll-off (RORO) ships. 41
5.3.6.1 General. 41
5.3.6.2 Large Medium speed roll-on/roll-off ships (LMSR). 43
5.3.6.3 Fast sealift ships (FSS). 43
5.3.6.4 Cape D class. 43
5.3.6.5 Cape H class. 43
5.3.6.6 Miscellaneous RORO vessels. 61
5.3.7 Support Vessels. 61
5.3.8 Logistics-over-the-shore (LOTS) operations and inland waterways. 61
5.3.8.1 General. 61
5.3.8.2 Landing craft. 63
5.3.8.3 Amphibian. 64
5.3.8.4 Air-cushioned. 64
5.3.8.4.1 Cargo deck and ramps. 71
5.3.8.4.2 Strength limits. 71
5.3.8.4.3 Environmental conditions. 71
5.3.8.4.4 Tiedown rails. 74
5.3.8.4.5 LCAC cargo restraint criteria. 74
5.3.8.4.6 LCAC Heavy weather restraint criteria. 75
5.3.8.5 Future watercraft. 75
5.3.8.6 Designing for transport aboard amphibious ships. 75

5.4 Fixed-wing air transport. *76*
5.4.1 Flyable system weight. 76
5.4.2 U.S. military fixed-wing cargo aircraft. 76
5.4.3 Design data. 77
5.4.4 Air cargo handling. 77
5.4.4.1 Shoring. 77
5.4.4.2 463L cargo handling system. 77
5.4.5 Air transport by DOD controlled aircraft. 78
5.4.5.1 AMC and CRAF fixed-wing aircraft. 78
5.4.5.2 AMC fixed-wing aircraft characteristics. 78

5.4.5.3 AMC fixed-wing aircraft deployability. 82
5.4.5.4 Navy and Marine Corps fixed-wing aircraft. 83
5.4.5.5 Army fixed-wing aircraft. 83

5.5 Air delivery by Low Velocity Airdrop (LVAD). 83
5.5.1 General. 83
5.5.2 LVAD criteria. 83
5.5.3 Airdrop platform. 83

5.6 Rotary-wing and tilt-wing air transport. 88
5.6.1 General. 88
5.6.2 Internal helicopter/tilt-wing transport. 88
5.6.3 External helicopter/tilt-wing transport. 92
5.6.4 NATICK certification. 92

5.7 Lifting and tiedown provisions. 92
5.7.1 General guidance. 92
5.7.2 Equipment tiedown provisions. 95
5.7.3 Lifting provisions. 95
5.7.4 Multipurpose provisions. 95
5.7.5 Cargo tiedown provisions. 96
5.7.6 Large cargo tiedown provisions. 96
5.7.7 Supplemental air transport tiedown provisions. 96
5.7.8 All provisions. 96

5.8 Intermodal cargo containers. 97
5.8.1 Classification and dimensions of cargo containers. 97
5.8.2 Designing for containerization. 97
5.8.3 Rocket and missile containers. 97
5.8.4 Flatracks. 100
5.8.4.1 ISO flatracks. 100
5.8.4.2 FSS flatracks. 100
5.8.4.3 Heavy duty flatracks. 100
5.8.6 Load Handling System (LHS) flatracks. 102
5.8.6.1 Palletized Load System (PLS) M1077 flatrack. 103
5.8.6.2 PLS M1 flatracks. 104
5.8.6.3 PLS M3 flatracks (CROP). 104

5.9 Shelters. 105
5.9.1 General. 105
5.9.1.1 S-250 shelter. 105
5.9.1.2 Lightweight multipurpose shelter (LMS), S-788. 105
5.9.1.3 S-280 shelter. 107
5.9.1.4 ISO Shelter. 107
5.9.2 Shelter transportability and certification. 107

5.9.2 NATICK certification. 107
5.9.3 Shelter modifications. 111
5.9.4 Nonstandard shelters. 111

5.10 Overloads. 112
5.10.1 General. 112
5.10.2 Overload prevention. 112
5.10.3 Other prime mover overload considerations. 112
5.10.4 Designing for transport. 112

5.11 Assembly/disassembly. 112
5.11.1 General. 112
5.11.2 Transportability design for assembly/disassembly. 113

6. NOTES. 113
6.1 Intended use. 113
6.2 Issue of DODISS. 113
6.3 Data requirements. 113
6.4 Subject term (key word) listing. 113
6.5 International standardization agreements. 114
6.6 Changes from previous issues. 114

APPENDIX
Sample Problem for determining Bridge Formula Requirements 115
A.1 Scope. 115
A.2 Applicable documents. 115
A.3 Symbols. 115
A.4 General requirements. 115
A.5 Detailed requirements. 115
A.5.1 Example. 115

TABLES
Table 1. Crew Weights 19
Table 2. Typical North American railcar characteristics 22
Table 2. Typical North American railcar characteristics - continued 23
Table 3. Characteristics of Railion (formerly DB) flatcars 26
Table 4. Korean flatcar characteristics 31
Table 5. Deck and hatch characteristics of typical breakbulk vessels 37
Table 6. Deck and hatch characteristics of a typical combination vessel 39
Table 7. LMSR hold summary (USNS Gordon) 44
Table 8. LMSR fixed-ramp characteristics (USNS Gordon) 45
Table 9. Cargo hold door dimensions and locations (USNS Gordon) 46
Table 10. FSS Hold Summary 58
Table 11. FSS Fixed-ramp characteristics 58
Table 12. RORO Ship characteristics 59

Table 12. RORO Ship characteristics continued 60
Table 13. Auxiliary ship characteristics 62
Table 14. Auxiliary ship hatch data 62
Table 15. T-ACS Ship Crane Capabilities 63
Table 16. LOTS Lighterage Compatibility 64
Table 17. USA, USMC, and USN lighterage 65
Table 18. LCAC characteristics 70
Table 19. LCAC capabilities 72
Table 20. LCAC specific limitations for the craft and cargo deck 72
Table 21. LCAC cargo restraint requirement 74
Table 22. LCAC G-force requirements for heavy weather transport 75
Table 23. Crash restraint criteria for Air Force fixed-wing aircraft 78
Table 24. C-27 and C-130 information 80
Table 25. C-17/C-17ER/C-5 Cross-sectional information. 81
Table 26. Navy/Marine Corps fixed-wing cargo aircraft capabilities 84
Table 27. Design constraints for Navy/Marine Corps fixed-wing aircraft 84
Table 28. Cargo restraint criteria for Navy/Marine Corps fixed-wing aircraft 85
Table 29. Army fixed-wing cargo aircraft capabilities 85
Table 30. Design constraints for Army fixed-wing aircraft 86
Table 31. Crash restraint criteria for Army fixed-wing aircraft 86
Table 32. LVAD rigged load height 86
Table 33. LVAD acceptable item height 87
Table 34. Maximum gross rigged weights (GRW) for LVAD 87
Table 35. Maximum allowable item weights for LVAD 87
Table 36. Design constraints for Army rotary-wing aircraft 89
Table 37. Crash restraint criteria for Army rotary-wing aircraft 89
Table 38. Design constraints for Navy/Marine Corps rotary-wing aircraft 90
Table 39. Cargo restraint criteria for Navy/Marine Corps 90
Table 40. Army rotary-wing aircraft internal load capabilities
for 30 nautical mile radius 91
Table 41. Navy/Marine Corps rotary-wing aircraft internal load capabilities
for 30 nautical mile radius 91
Table 43. Army rotary-wing aircraft external load capabilities 93
for maximum radius mission 93
Table 42. Army rotary-wing aircraft external load capabilities
for 30 nautical mile radius 93
Table 44. Navy/Marine Corps rotary-wing aircraft external load capabilities
for 30 nautical mile radius 94
Table 45. Dry cargo ISO containers 99
Table 46. Design limits for equipment requiring transport in containers 99
Table 47. Maximum gross weight of container (fixed-wing) 99
Table 48. FSS flatracks, dimensions, weight and capacities 102

FIGURES

Figure 1. Typical Dimensions of a Bi-level Flatcar. 24
Figure 2. AAR outline diagram of single loads, without end overhang, on open-top cars (AAR diagram). 25
Figure 3. DOD rail clearance diagram. 27
Figure 4. Typical vehicle loading on HTTX flatcar (the OTTX layout is similar). 28
Figure 5. Typical vehicle loading on TTDX flatcar (the ITTX layout is similar). 28
Figure 6. GIC Diagram. 30
Figure 7. NATO Envelope M (formerly Envelope B). 32
Figure 8. Korean clearance diagram. 33
Figure 9. Comparison of loading diagrams. 34
Figure 10. LASH barge characteristics. 40
Figure 11. SEABEE barge dimensional data. 41
Figure 13. Typical LMSR inboard profile (USNS Gordon). 47
Figure 14a. USNS GORDON deck plan for the 02 Level and A Deck. 48
Figure 14b. USNS GORDON deck plan for the AB and A decks. 49
Figure 14c. USNS GORDON deck plan for the BC and C decks. 50
Figure 14d. USNS GORDON deck plan for the D, E, and F decks. 51
Figure 15. Typical LMSR end/side ramp positions (USNS Gordon). 52
Figure 16. Typical LMSR lashing pattern. 53
Figure 17. FSS inboard profile. 54
Figure 18a. FSS deck layout. 55
Figure 18b. FSS deck layout continued. 56
Figure 18c. FSS deck layout continued. 57
Figure 19. Typical FSS lashing pattern. 61
Figure 20. Landing Craft, Mechanized (LCM-8). 66
Figure 21. Landing Craft, Utility (LCU 2000). 67
Figure 22. Logistics Support Vehicle (LSV). 68
Figure 23. Lighter, Amphibious (LARC-LX). 69
Figure 24. LCAC cargo deck dimensions. 73
Figure 25. LCAC cargo deck load diagram. 73
Figure 26. C-27 and C-130 equipment design limit cross-sections 79
Figure 27. C-17/C-17ER equipment design limit cross section 80
Figure 28. C-5 equipment design limit cross section 81
Figure 29. Container Dimensions. 98
Figure 30. FSS Flatrack. 101
Figure 31. S-250 shelter. 106
Figure 32. Lightweight Multipurpose Shelter, S-788. 108
Figure 33. S-280 shelter (MIL-S-55286). 109
Figure 34. ISO shelter. 110
Figure 35. Sample case for determining bridge formula requirements. 117

1. SCOPE

1.1 General.

In accordance with the Department of Defense (DOD) Engineering for Transportability program described in DOD Instruction 4540.7, *Operation of the DOD Engineering for Transportability and Deployability Program*, this standard establishes basic transportability interface criteria for use in the development and shipment of items of materiel. The standard covers dimensional and weight limitations for all modes of transport to ensure that new and modified systems meet the interface requirements of the Defense Transportation System (DTS) (highways, tunnels, bridges, railways, etc.) and the DTS lift assets (rotary and fixed wing aircraft, railcars, ships, barges, etc.) for unrestricted worldwide transport and deployment. It also covers lifting and tiedown provisions, containerization criteria, overloads, assembly/disassembly, air delivery, shelter criteria, transportability testing, and modeling and simulation of the transportation environment. This standard will allow materiel development and procurement activities to design military equipment to meet the transportability requirements of various modes.

1.2 Applicability.

This DOD interface standard is for use by the DOD acquisition community, to include the private sector, in the acquisition of defense materiel and systems. It should be included, by reference, in appropriate documentation of the DOD acquisition process to ensure acceptable transportability (see 3.45). The Defense Standards Improvement Council (DSIC) approved this standard as an interface standard in May 1995; therefore, reference of this standard in solicitations does not require a waiver.

1.3 Measurement units.

This standard uses the measurement system, either English or metric, of the source material as the primary measurement. The conversion to the other measurements system is provided in parentheses.

2. APPLICABLE DOCUMENTS

2.1 General.

The documents listed in this section are specified in sections 3, 4, and 5 of this standard. This section does not include documents cited in other sections of this standard or those documents recommended for additional information or as examples. While every effort has been made to ensure the completeness of this list, document users are cautioned that they must meet all specified requirements documents cited in sections 3, 4, and 5 of this standard, whether or not they are listed.

2.1.1. Specifications and standards.

The following specifications and standards form a part of this document to the

extent specified herein. Unless otherwise specified, the issues of these documents are those listed in the issue of the DOD Index of Specifications and Standards (DODISS) and supplement thereto cited in the solicitation (see 6.2).

STANDARDS

MILITARY

MIL-STD-209	*Interface Standard for Lifting and Tiedown Provisions*
MIL-STD-810	*Environmental Engineering Considerations and Laboratory Tests*
MIL-STD-814	*Requirements for Tiedown, Suspension, and Extraction Provisions on Military Materiel for Airdrop*
MIL-STD-913	*Requirements for Certification of Sling Loaded Military Equipment by Department of Defense Helicopters*

HANDBOOKS

MILITARY

MIL-HDBK-669	*Loading Environment and Related Requirements for Platform Rigged Airdrop Materiel*
MIL-HDBK-910	*Mobile Tactical Systems Overload Prevention Procedures*
MIL-HDBK-1791	*Designing for Internal Aerial Delivery in Fixed-Wing Aircraft*

(Unless otherwise indicated, copies of above specifications and standards are available from the following website: http://assist.daps.dla.mil).

2.1.2 Other Government documents, drawings and publications.
The following documents form a part of this document to the extent specified herein. Unless otherwise indicated, the issues are those cited in the solicitation.

CODE OF FEDERAL REGULATIONS

CFR Title 23 Highways

CFR Title 49 Transportation

(Obtain copies from the following website: http://www.gpoaccess.gov/cfr/index.html).

MANUALS

MILITARY

FM 5-170 *Engineer Reconnaissance*

TM 5-312 *Military Fixed Bridges*

AFJMAN 24-204/ TM 38-250/ NAVSUP PUB 505/ MCO P 4030.19/ DLAI 4145.3 *Preparing Hazardous Materials for Military Air Shipment*

AR 70-59 *Department of Defense Tactical Shelter Program*
OPNAVINST 3900.27B
AFR 80-8/MCO 3920.5A

(Obtain copies from the procuring activity or as directed by the contracting officer.)

DATA ITEM DESCRIPTIONS (DIDs)

DI-PACK-80880 *Transportability Report*

(Obtain copies assist.daps.dla.mil/online/start/)

TRANSPORTATION ENGINEERING AGENCY (TEA)

TEA Pamphlet 70-1 *Transportability for Better Deployability*

Directory of Highway Permit and Mobilization Control (MOBCON) Officials

(Obtain copies from the Director, SDDCTEA, 720 Thimble Shoals Blvd., Suite 130, ATTN: SDTE-DPE, Newport News, VA 23606-4537, 757-599-1109, or download from the internet at www.tea.army.mil)

DEPARTMENT OF DEFENSE

DOD Directive 4510.11 *DOD Transportation Engineering*

(Obtain copies from
www.tea.army.mil/dodprog/doddirective451011p.pdf)

DOD Instruction 4540.7 *Operation of the DOD Engineering for Transportability* and Deployability Program

(Obtain copies from
www.tea.army.mil/pubs/nr/deploy/transinstruction/DODI 4540.7 12 oct 04.pdf)

AIR FORCE

AF PAM 10-1403 *Air Mobility Planning Factors*

(Obtain copies from the procuring activity or as directed by the contracting officer.)

2.2 Non-Government publications.
The following documents form a part of this document to the extent specified here. Unless otherwise specified, the issues of these documents are those listed in the DODISS cited in the solicitation. Unless otherwise specified, the issues of documents not listed in the DODISS are the issues of the documents cited in the solicitation.

ASSOCIATION OF AMERICAN RAILROADS

Field Manual of the AAR Interchange Rules

Outline Diagram for Single Loads, Without End Overhang, on Open-Top Cars

Universal Machine Language Equipment Register (UMLER)

(Obtain copies from the Association of American Railroads, Washington DC, toll free at 877-999-8824).

INTERNATIONAL ROAD FEDERATION

Limits of Motor Vehicle Sizes and Weights

(Obtain copies from the International Road Federation, 1010 Massachusetts Ave, NW, Fourth Floor, Washington, DC 20001, (202) 371-5544, www.irfnet.org.)

NATO STANDARDIZATION AGREEMENT (STANAG)

STANAG 2021 ENGR	*Computation of Bridge, Ferry, Raft, and Vehicle Classifications*
AMOVP-4	*Technical Aspects of the Movement of Military Materiels by Railroad*
STANAG 2413 MH	*Demountable Load Layering Platforms (DLLP)*

(Obtain copies from the Standardization Documents Order Desk, Building 4D, 700 Robbins Avenue, Philadelphia, PA 19111-5094, phone number (215) 697-2179, facsimile (215) 697-1462.)

R.E.R. PUBLISHING CORPORATION, AGENT

The Official Railway Equipment Register

(Obtain copies from the R.E.R. Publishing Corporation, Agent, 400 Windsor Corporate Park, 50 Millstone Road, Suite 200, East Windsor, NJ 08520, www.cbizmedia.com, toll free 888-215-6084.)

AMERICAN SOCIETY OF TESTING AND MATERIALS

ASTM E 1925 *Engineering and Design Criteria for Rigid Wall Relocatable Structures*

(Obtain copies from the American Society for Testing and Materials, 100 Barr Harbor Drive, West Conshocken, PA 19428, (610) 832-9585, www.astm.org.)

2.3 Order of Precedence.
In the event of a conflict between the text of this document and the references cited here, the text with the most severe requirement will take precedence.

3. DEFINITIONS

For the purpose of this document, the following definitions apply.

3.1 Airdrop (air delivery).
A tactical aircraft operation for the delivery of supplies or equipment by dropping cargo from the aircraft (fixed or rotary-wing) in flight. The supplies or equipment can be dropped free-fall or parachute retarded.

3.2 Athwartship.
Across the ship from side to side.

3.3 Basic Issue Item (BII).
Those essential ancillary items required to operate the equipment and to enable it to perform the mission and function for which it was designed or intended. BII must be with the equipment during operation and whenever it is transferred between property accounts.

3.4 Breakbulk general-cargo ships.

Breakbulk ships are designated as general cargo ships because of their ability to carry a variety of cargo in various forms. Cargo loading/unloading operations are accomplished via lift-on/lift-off using shipboard or pierside cranes. The normal constraints encountered with breakbulk vessels are low overhead clearances, limited deck strengths, limited lifting capabilities or ship's gear, and slow speed of cargo operations.

3.5 Cargo tiedown provision.

A padeye, fixture, or attachment integral to the cargo compartments of trucks or trailers for securing cargo or accessories. See MIL-STD-209.

3.6 Circus loading method.

Loading flatcars by placing a string of flatcars at an end ramp, and driving vehicles on the flatcars filling the entire string. Vehicles are selected and staged so the flatcars are loaded efficiently accounting for the type of flatcar and the type of equipment, and the use of deck space is maximized.

3.7 Combat developer (CBTDEV).

The combat developer (CBTDEV) is the command or agency that formulates warfighting requirements for doctrine, organization, training, materiel, leadership and education, personnel, and facilities (DOTLMPF). May be used generically to represent the user and user maintainer community role in the materiel acquisition process (counterpart to generic use of MATDEV).

3.8 CONUS.

Continental United States. This usually excludes Alaska and always excludes Hawaii.

3.9 Curb weight.

For light tactical vehicles, the curb weight is the weight of the vehicle with BII on board and with a full load of fuels and lubricants. For medium and heavy tactical vehicles, the curb weight includes the weight of the truck (or trailer), including materials handling equipment (if applicable), with all kits, attachments, accessories, equipment, BII and full complement of fuel, lubricants, coolants, hydraulic fluid, and crew.

3.10 Cushioned draft gear railcar.

Any railcar equipped with center or end-of-car cushioning devices. Cushioned draft gear railcar cushioning devices are covered by Rule 59 in the *Field Manual of the AAR Interchange Rules.* In general, the distance of draft gear (or center sill of railcars with cushioned underframe) travel from normal position to maximum extension for one end of car is 5 inches or greater.

3.11 Deck loading.
Vessel decks, wharf decks, shop floors, and similiar structural platforms designed to distribute a load, the deck loading is the weight of the Systems/Equipment (S/E) distributed over the S/E's shadow area (length times width of the S/E) not including small protrusions such as the gun barrel on a tank. Also known as deck strength.

3.12 Defense transportation system (DTS)
That portion of the global transportation infrastructure that supports DOD common-user transportation needs across the range of military operations. It consists of those common-user military and commercial assets, services, and systems organic to, contracted for, or controlled by the Department of Defense.

3.13. Deployability.
The ability to move forces and materiel anywhere in the world in support of a military operation.

3.14 Deployability engineering.
The science of designing into the force (personnel and materiel) the ability to be moved by transportation assets and/or modes anywhere in the world in support of a military operation.

3.15 Equipment tiedown provision.
An integral part of an item, also called a tiedown eye, fixture, facility, or attachment. A tiedown provision provides a means of attaching a tiedown lashing to the equipment for restraint purposes during shipment. See MIL-STD-209.

3.16 Extraction parachutes.
One or more parachute(s) (usually smaller than main parachute) used to withdraw an airdropped item from the aircraft.

3.17 Flatrack.
Cargo carrying platform, of a permanent character, suitable for repeated use. Flatracks do not have sidewalls or a roof structure.

3.18 Floor contact pressure.
The resultant pressure exerted by the weight of S/E on the carrying surface of the transporter through the portions of the S/E actually in contact with the carrying surface.

3.19 Fragile item.
An item of S/E that is susceptible to damage and/or loss of serviceability during transport and handling. It requires special shipping procedures or equipment, environmental control, or special packaging for protection during transport.

3.20 Gross weight.
The weight of the basic equipment (curb weight for vehicles) plus the weight of any

associated support items of equipment (ASIOE) and cargo attached to the equipment, contained within the equipment, or projected as payload for the equipment (that is, shelters). For light vehicles, crew weight and pintle load are considered as payload. The weight of ammunition and/or additional fuels and lubricants (to include water) necessary to render the system combat ready is also considered as payload.

3.21 Hazardous material.

A substance or device that, as determined by the Secretary of Transportation, could pose an unreasonable risk to health, safety, and property when transported in commerce and is so designated in the table set forth in 49 Code of Federal Regulations (CFR) 172.101. Included are explosives; flammable, combustible, and pyrophoric liquids; flammable solids; oxidizers, and organic peroxides; corrosive materials; compressed gases; poisons and irritating materials; etiologic agents; and radioactive materials.

3.22 Heavy vehicles.

As used in this standard, the term “heavy vehicles” means any vehicle where the crew weight, pintle load, ammunition, and any additional fuels and lubricants (to include water) necessary to render the system combat ready are NOT considered as payload.

3.23 Internal aerial delivery.

Internal air transport aboard military prime mission cargo aircraft or Civil Reserve Air Fleet (CRAF) aircraft.

3.24 Item disassembly.

Removal of parts of an item to reduce its physical characteristics (weight and dimensions) so that transport limitations are not exceeded.

3.25 Item reassembly.

Replacement of parts on an item to restore the item to its operational configuration.

3.26 Large cargo tiedown provision.

A padeye, fixture, or attachment integral to cargo trucks and trailers, flatbed trailers, and flatracks used as a demountable truck or trailer bed for securing large, heavy items. See MIL-STD-209.

3.27 Lifting provision.

An integral part of the equipment, also called a padeye, lug, eye, facility, or attachment point. A lifting provision provides a means of attaching a sling to the equipment for safe lifting. See MIL-STD-209.

3.28 Light vehicles.

As used in this standard, the term “light vehicles” means any vehicle where the crew weight, pintle load, ammunition, and any additional fuels and lubricants (to include water) necessary to render the system combat ready are considered as payload.

3.29 Lighter.

Small vessel, used in loading/unloading ships in logistics-over-the-shore (LOTS) operations. In the Army, lighters include amphibians, landing craft, and such harbor craft as barges.

3.30 Light weight.

The empty weight of a railroad car including its trucks and any other appurtenances considered standard to the railcar. The light weight is stenciled on every freight car in conjunction with the load limit stenciling, and is abbreviated “LT WT.”

3.31 Load limit.

The maximum weight that can be loaded on a railcar. For railcars meeting standard AAR design criteria, the load limit is equal to the maximum allowable gross weight on the rails (determined by axle and wheel size) less the light weight of the railcar. Load limit is stenciled on every freight car in conjunction with the light weight stenciling and is abbreviated “LD LMT.”

3.32 Logistics-over-the-shore (LOTS).

Logistics-over-the-shore (LOTS) - Transferring military equipment and supplies from cargo ships anchored offshore to the beach in support of forces ashore. During strategic deployments, most military equipment will be transported by ship. There may be occasions, however, when improved ports are not available because of poor host nation port infrastructure, sabotage, and so forth. LOTS provides both an alternative as well as a supplemental method to move equipment from sealift ships to shore. (Also known as Joint Logistics Over The Shore (JLOTS).)

3.33 Materiel Developer (MATDEV).

The Materiel Developer (MATDEV) is the research, development, and acquisition (RDA) command, agency, or office (Program Manager (PM)/Program Executive Office (PEO)) assigned responsibility for the system under development or being acquired. The term may be used generically to refer to the RDA community in the materiel acquisition process (counterpart to the generic use of CBTDEV).

3.34 Multipurpose provision.

A single provision that meets the requirements of this standard for both lifting and equipment tiedown. See MIL-STD-209.

3.35 Operational configuration.

The state that equipment is in when it is fully capable of performing its mission as set out in the requirements document.

3.36 Payload rating.

The maximum weight a vehicle is designed to safely transport. For light vehicles, the crew weight, pintle load, ammunition, and any additional fuels and lubricants (to

include water) necessary to render the system combat ready are considered as payload.

3.37 Plane of the provisions.
A geometric plane connecting the centers of all lifting provisions of an item of equipment. The “plane of the provisions” will only be a horizontal plane if the height of the front and rear provisions is the same (see Appendix B of MIL-STD-209 for a pictorial of the “plane of the provisions”).

3.38 Potential transportability problem item.
An equipment item in its proposed shipping configuration that, because of its size or weight, or lack of adequate means for lifting and tiedown, may be denied movement. It may require special permits or waivers and/or special equipment or handling, or may be unacceptably delayed when moving within existing or newly designed transportation systems. A more detailed, technical definition of a transportability problem item is given in section 4 (see 4.4) of this military standard.

3.39 Recovery parachutes.
Parachutes used during airdrop delivery to retard and stabilize the descent of an airdrop item.

3.40 Reporting marks.
Lettering appearing on the sides of all freight cars identifying ownership and car number such as marks including TTX for TTX Company (formerly Trailer Train Company), DODX for Department of Defense (SDDC Operations Center), or BNSF identifying cars of the Burlington Northern Santa Fe railroad company. The “X” denotes private ownership as differentiated from railroad ownership. The first letters used with TTX are arbitrary designations used to differentiate various car types.

3.41 S/E (Systems and equipment).
All items and item components necessary for equipping, maintaining, operating, and supporting military activities, without distinction as to their application for administrative or combat purposes, excluding ships.

3.42 Shipping configuration.
The item/system configuration, stated in weights and dimensions, that a military unit will use for transport. It also includes the restraint arrangement for safe transport of the item/system.

3.43 Spreader bars.
A bar, set of bars, or other framework used during lifting operations to prevent lifting sling legs from damaging an item by compression, friction, and so forth.

3.44 Standard draft gear railcar.
Any railcar that is not equipped with center or end-of-car cushioning devices. The

standard draft gear devices in these railcars are covered in Rule 21 of the Field Manual of the AAR Interchange Rules. Typical travel is usually less than 3 inches (76 mm). Railcars having standard draft gear are so listed in the Universal Machine Language Equipment Register (UMLER) files maintained by the AAR.

3.45 Strategic deployment.
The continuous or sustained movement of units, personnel, and logistic support items between CONUS and overseas areas or between theaters of operation.

3.46 Tactical deployment.
Deployment of units, personnel, and logistic support items within a theater of operations. The C-130 aircraft, helicopters and landing craft are examples of tactical transporters.

3.47 Transportability.
The inherent capability of an item or system to be effectively and efficiently moved by required transportation assets and modes.

3.48 Transportability approval.
A statement by the Director of TEA that an item of materiel, in its shipping configuration, is transportable by the mode(s) of transportation specified in development guides or materiel requirements, or meets amended transportability characteristics approved by higher authority.

3.49 Transportability engineering.
The science of designing into an item or system the inherent capability to be effectively and efficiently moved by required transportation assets and modes.

3.50 Transportability engineering analysis.
An analysis of the transportability of an S/E item or its components, which assesses its ability to be transported by the modes specified in the materiel requirements documents.

3.51 Transportability report.
An information package, submitted on a potential transportability problem item during S/E development/acquisition. It contains all the information necessary for performing a comprehensive transportability engineering analysis. The transportability report is prepared by the materiel developer or contractor in accordance with the format and content of Data Item Description, DI-PACK-80880 and TEA Pamphlet 70-1, *Transportability for Better Deployability.* The materiel developer is responsible for submitting this report to the appropriate transportability agent.

3.52 ‘Tween-deck.
Any deck below the upper deck and above the lowest deck. General cargo ship

with one or more decks, known as ‘tween decks, dividing the cargo holds into lower and upper cargo spaces.

3.53 Vehicle payload.

For light vehicles, payload is any load placed in or on the vehicle that increases the vehicle weight above the curb weight. Payload includes the weight of the driver and passengers (crew), weight of crew’s personal gear, cargo, water cans, table of organization and equipment or common table of allowances items, kits, communications and electronics equipment, cargo cover kits, shelterized systems (including the weight of the shelter), ammunition and/or additional fuels and lubricants (to include water) necessary to render the system combat ready. The trailer tongue load must be included as a part of the payload for Group II High Mobility Multipurpose Wheeled Vehicles (HMMWVs), Heavy HMMWV Variants (HHVs) and HMMWV Expanded Capacity Vehicles. Tongue loads in excess of 200 pounds must be counted as part of the payload for the Group I HMMWV models. For heavy vehicles, the payload shall include cargo only.

3.54 Watertight.

Designed and constructed to withstand a static head of water without any “leakage” (46 CFR 114.400 and 175.400). This refers to structures that must withstand hydrostatic loading for extended periods of time, including the hull bottom and sides, main deck plating, tanks, and “subdivision bulkheads.” The latter are meant to contain the spread of water that enters the hull as a result of hull breach due to collision, grounding, and so forth. All weldments and penetrations of such structures are subject to strict testing requirements to ensure that no leakage occurs under the particular design conditions of the vessel.

3.55 Weathertight.

Weathertight means that water will not penetrate in any sea condition (46 CFR 114.400 and 175.400). This refers generally to topside structures subject to occasional and short exposure to water on deck, from boarding waves or wind driven rain and spray. Regulations specify arrangement and height for weathertight appurtenances, as well as load and welding specifications, which are generally less stringent than for watertight structures.

4.0 GENERAL REQUIREMENTS

4.1 Transportability Criteria.

This standard provides the interface requirements necessary to design an item of equipment to be transported through the Defense Transportation System (DTS). The information provides the critical characteristics, both for the transport vehicle and transportation system.

4.2 DOD Engineering for Transportability and Deployability Program.
DOD Directive 4510.11, *DOD Transportation Engineering*, and DOD Instruction 4540.7, *Operation of the DOD Engineering for Transportability and Deployability Program*, implement a coordinated engineering for transportability and deployability program between the DOD components. This program provides for the inclusion of transportability/deployability requirements in the design of end items of equipment obtained through the materiel acquisition process for the military services.

Transportability is a consideration for all acquisition categories and all acquisition sources, including new or modified equipment, rebuys, and commercial or non-developmental systems.

Transportability is important throughout the acquisition cycle. However, it is essential that transportability be considered at the beginning of the materiel acquisition process when the impact on design is the greatest. Incorporation of transportability characteristics into the initial concepts and designs minimizes the impact on program cost and schedule. It is easier and less costly to incorporate equipment characteristics that support transport into the initial design than it is to alter or retrofit actual hardware.

Transportability is equally important in other stages of the acquisition cycle. The omission of transportability considerations during the middle or later stages of the cycle, or deletion during tradeoff decisions, can negate all transportability efforts and advances made during the early stages.

4.3 Transportability design responsibilities.
The materiel developer and/or contractor shall be responsible for incorporating transportability considerations into equipment design.

4.4 Transportability problem item.
An S/E item is considered a transportability problem item when any of the following conditions apply:

a. The item is wheeled or tracked, and is to be towed, hauled, or self-propelled on or off highway.

b. The item increases the physical characteristics of the designated transport medium.

c. The item requires special handling or specialized loading procedures.

d. The item has inadequate ramp clearance for ramp inclines of 15°.

e. Exceeds any of the following conditions:

(1) Length - 20 feet (6096 mm, 240 in).

(2) Width - 8 feet (2438 mm, 96 in).

(3) Height - 8 feet (2438 mm, 96 in).

(4) Weight - 10,000 pounds (4,536 kg).

(5) Weight per linear foot - 1,600 pounds/foot (2381 kg/m).

(6) Floor contact pressure - 50 psi (344.7 kPa).

4.5 Management of transportability problem items.

If an S/E item meets any of the conditions listed in 4.4a-4.4c, or exceeds the criteria of 4.4e, a transportability report shall be submitted by the MATDEV to the appropriate service transportability agent. The report shall be prepared by the materiel developer or contractor and shall be in accordance with the format and content of Data Item Description, DI-PACK-80880 (see 6.2).

4.6 Hazardous materials packaging and transportation requirements.

In addition to the transportability criteria identified in this document, all shipments of hazardous materials will also comply with applicable modal packaging and transportation requirements as identified in AFJMAN 24-204/TM 38-250/NAVSUP PUB505/MCO P4030.19/DLAM 4145.3 - *Preparing Hazardous Materials for Military Air Shipment,* 49 CFR, The *International Maritime Dangerous Goods Code,* and the United Nation's *Recommendation on the Transportation of Dangerous Goods.*

5. DETAILED REQUIREMENTS

5.1 Highway Transportation.

Highway transport vehicles developed for over-the-road movement should meet the physical, legal, and administrative limitations on roadways, bridges, and other structures imposed by Federal, State, and local transportation authorities. This document summarizes general size and weight constraints of CONUS and various foreign highway systems. These limits establish guidelines to ensure that new military highway transport equipment is compatible with the capabilities and limitations of CONUS and foreign highway systems. This is important, since military vehicles are not normally exempt from Federal, State, or local size and weight limitations.

5.1.2 CONUS Highways.

5.1.2.1 Unrestricted transport.

Federal weight limits apply to vehicles and vehicle cargo combinations on Interstate highways. States may issue permits for nondivisible vehicles or loads. On other non-interstate highways, the state establishes weight limits. Federal length and width limits

apply to the National Network (see 23 CFR 658 Appendix A.1). These provisions preempt conflicting state laws and regulations. There is no federal law on height. The size and weight legal limits of the interstate or National Network vary from State to State. The "Summary of Size and Weight Limits" in appendix A of the *Directory of Highway Permit and Mobilization Control (MOBCON) Officials* is prepared by the American Trucking Association, Inc. and summarizes the State legal limits for moves of oversize and overweight equipment. To ensure general unrestricted CONUS highway transport, vehicles and vehicle cargo combinations shall be designed to the following constraints when unrestricted CONUS highway transport is a requirement:

Height	162 inches (4115 mm, 13.5 ft)
Width	96 inches (2438 mm, 8 ft)
Length	40 feet for a single unit (12192 mm, 480 in) 55 feet for a combination unit (16 764 mm, 660 in) 48 feet for a semitrailer (14 630 mm, 576 in)
Single axle load	20,000 pounds (9072 kg)
Tandem axle load	34,000 pounds (15 422 kg)
Triple axle load	42,000 pounds (19 051 kg) (3 States have lower limits)
Gross vehicle weight	*80,000pounds (36 287 kg)

*NOTE: The gross vehicle weight constraint is also dependent on the Federal Bridge Gross Weight formula, which is presented in 5.1.2.2.

5.1.2.2 U.S. Federal Bridge Gross Weight formula.

The bridge gross weight formula specifies the relationship between the axle (or groups of axles) spacing and the weight that the axle(s) may carry to prevent overstressing highway bridges. The bridge formula is:

$$W = 500 (LN/(N-1) + 12N + 36)$$

where:

W = overall gross weight on any group of two or more consecutive axles to the nearest 500 pounds

L = distance in feet between the outer axles of any two or more consecutive axles

N = number of axles in the group under consideration

The bridge formula is incorporated into Title 23 CFR 658. A sample problem for determining bridge formula requirements is in appendix A.1 of this military standard.

5.1.2.3 The National Network.

The National Network has been identified based on which large vehicles authorized by the Surface Transportation Assistance Act (STAA) of 1982 are allowed to operate. One configuration allowed to travel on the National Network is the truck tractor-semitrailer-trailer combination. (Trailers must be no longer than 28 feet (8534 mm, 336 in) for unrestricted National Network transport.) This network includes the Interstate System plus other qualifying Federal-Aid Primary System Highways. Title 23 CFR 658 establishes the requirements for highway transport on the National Network and identifies the network.

5.1.2.4 U.S. highway permit limits.

The U.S. highway permit limits are constraints within which a State will allow highway transport under its permit procedures when unrestricted highway transport is not possible. The conditions for which a State will issue movement permits without certification as essential to the national defense are in the *Directory of Highway Permit and MOBCON Officials.* Note that these limits are adjusted by particular conditions at movement time and should be verified with the appropriate State highway official prior to highway transport. Vehicles and vehicle cargo combinations shall meet the permit limit criteria in the *Directory of Highway Permit and MOBCON Officials* when U.S. highway transport within permit limitations is a requirement.

5.1.2.5 Certification Essential to National Defense.

Certification for highway movement essential to national defense is certification by an appropriate military authority that the cargo is “essential cargo.” The oversize or overweight shipment cannot be reduced in size or weight and the shipment must be moved via highway. This certification is a means to inform regulatory authorities of the importance of the movement to allow maximum flexibility in approving the permit. This materiel must be eligible for highway movement in accordance with the provisions of DOD 4500.9-R, *Defense Transportation Regulation (DTR), Part III, Mobility.* Training, maintenance, and public-relations mission movements, or savings of transportation cost or time, are not justifications for meeting certification requirements. Once the installation commander determines that the materiel meets the requirements, he/she must request that the Army commander of the shipping command certify the movement is essential to national defense for movements by other than commercial carriers. Local installation commanders cannot make this certification. Certification that the movement is essential to national defense does not guarantee that U.S. highway authorities will allow movement. States have absolute authority over their public roadways both in peacetime and wartime and will make all final determinations of transport capability.

5.1.2.6 Safety.

For movement on public highways, reference shall be made to safety, lighting, brake, and stopping-distance specifications currently required for commercial vehicles by the U.S. Department of Transportation. Vehicles and vehicle cargo combinations shall meet the safety requirements of Title 49 CFR.

5.1.3 Foreign highways.

The weight and dimensional constraints at which vehicles and vehicle cargo combinations can move on foreign highways without permits constitute the foreign legal limits. These weight and dimensional legal limits vary from country to country.

Because such a wide variation exists in the foreign legal limits and some countries have limited highway systems, the following constraints are required to achieve general unrestricted transport in most North Atlantic Treaty Organization (NATO) countries:

Width	2.50 meters	(8.2 ft, 98.4 in)
Height	4.00 meters	(13.12 ft, 157.5 in)
Length	10.00 meters - single unit (32.81 ft, 393.7 in) 14.00 meters - combination unit (45.93 ft, 551.2 in)	
Single axle load	10 000 kg	(22,046 pounds)
Tandem axle load	16 000 kg	(35,274 pounds)

Gross vehicle weight (GVW) is dependent on the vehicle type, as defined in the *Limits of Motor Vehicle Sizes and Weights.* Vehicles and vehicle cargo combinations shall have a military load classification number less than 50, and meet the requirements of this paragraph and 5.1.2.1 when unrestricted worldwide highway transport is a requirement. For transportability purposes, the above limits represent the unrestricted foreign highway transport limits even though highways can be found in foreign countries that are more restricted.

For unrestricted highway transport in Korea the following apply:

Width	3.00 meters	(9.84 ft, 118.1 in)
Height	4.00 meters	(13.12 ft, 157.5 in)
Length	17.00 meters 19.00 meters (twin combinations on four-lane expressway)	(55.77 ft, 669.3 in) (62.34 ft, 748.0 in)

Single axle load	10 000 kg	(22,046 pounds)
Tandem axle load	16 000 kg	(35,274 pounds)
Gross weight	40 000 kg	(88,185 pounds)

5.1.4 Military Load Classification (MLC).

FM 5-170, STANAG 2021, and TM 5-312 provide guidance on route reconnaissance and classification. To make maximum use of existing routes, the military load-carrying capacity of the routes in a basic military road network must be determined. This process is called classification. The MLC system assigns whole numbers to vehicles, bridges, roads, and routes. Usually, the lowest bridge MLC number determines the MLC of a route. The materiel developer should request an MLC from the Tank-Automotive and Armaments Command (TACOM) for vehicles and vehicle cargo combinations during the engineering and manufacturing development phase of acquisition. Vehicles and vehicle cargo combinations shall be designed to the MLC requirement.

5.1.5 Determining crew weights.

The materiel developer must account for the weight of the crew when determining the GVW and axle loads of highway transporters. Also, the crew weight is considered a part of the payload for light vehicles. This weight includes the soldier's body weight plus the weight of the soldier's basic load of clothing, ammunition, individual equipment and weapon, and food. TEA identifies planning guidelines for crew member weights as follows:

The basic crew weight figures include 20.72 pounds (9.40 kg) of clothing, 64.47 pounds (29.24 kg) of equipment, and 32.53 pounds (14.76 kg) of existence load per person. Weight variances for multiple size crews account for reduced probability of several 95th percentile crewmembers being assigned to the same system. The basic body armor weights include a helmet (3 lbs), interceptor vest (8 lbs), vest plate (11 lbs), deltoid ancillary protection (4 lbs), and lower body protection (3 lbs). Allowances shall be made to accommodate increases in the crew weight due to operations in cold weather scenarios. For cold weather scenarios, the clothing weight will increase to 35 pounds (15.88 kg) and the equipment weight will increase to 80 pounds (36.29 kg) per person. This means a single-soldier crew weight will be 364 pounds (165.1 kg). The information in this paragraph is based on the Land Warrior and the 82nd Airborne Division. The materiel developer/contractor shall meet the requirements of this paragraph when determining crew weights for highway transport. See table 1 for applicable crew weights.

Table 1. Crew Weights

Total Crew Weight	Without Body Armor (lb, kg)	With Body Armor [1] (lb, kg)
Single-Soldier Crew	334 151.5	363 164.7
Two-Soldier Crew	640 290.3	698 313.6
Three-Soldier Crew	936 424.6	1,023 464.0
Four-Soldier Crew	1,220 553.4	1,336 606.0
Five-Soldier Crew	1,504 682.2	1679 [2] 761.6

1. For a single through four-soldier crew, 29 pounds of body armor is added for each soldier.
2. For a five-soldier crew, 116 pounds (4 x 29) is added for crew members' armor, plus 59 pounds is added for the gunner's armor (Cupola Protection Ensemble).

5.1.6 Cargo restraint requirements.

Transported items need to be secured to prevent movement and damage to the item and the transporter, and to prevent collateral damage. Restraint requirements vary by mode, and can not readily be compared between modes as basic assumptions used differ. For purposes of determining restraint, 1 g is the weight of the restrained item.

Highway: Current enforcement policy of the Federal Motor Carrier Safety Administration, Department of Transportation is to restrain payloads against 0.4 g deceleration in the forward direction, 0.5 g acceleration in the rearward direction, 0.25 g acceleration in the lateral direction, and 0.2 g acceleration in the vertical direction. These are considered normal operating conditions for motor vehicles. Cargo securement devices and systems must be designed and used such that under normal operating conditions the working load limit (WLL) for the devices is not exceeded. Working load limits for different type restraints are typically ¼ of the breaking strength for chain, ¼ of the nominal strength for wire rope, and 1/3 of the breaking strength for straps. Restraint devices should be marked with their WLL. Equivalent means of securement may be used in place of restraints, such as being in contact with a forward semitrailer bulkhead may be used in place of restraint devices preventing forward movement.

Rail: Rail restraint is applied to withstand the greatest forces encountered in normal transport. Restraint is applied to withstand 4.0 g in the longitudinal direction, 1.5 g in the lateral directions, and 2.0 g in the vertical direction. Determining the number of restraints required is based on the breaking strength of the restraints. Straps are not acceptable restraint except for specifically tested and approved loads.

Marine: Marine restraint requirements vary according to ship characteristics. Ships typically used for military shipments require restraint of 0.81 g in the lateral direction relative to the ship, 0.42 g in the longitudinal direction. Consideration of vertical restraint is not required. Application of ship's restraint gear is based on the breaking strength of the restraints.

Air (USAF) Fixed-Wing: Cargo restraint requirements are established to provide for the safety of the crew and aircraft in a survivable hard landing. Only Air Force approved restraint devices may be used. Restraint is applied to provide 3.0 g forward restraint relative to the aircraft, 2.0 g vertical restraint, and 1.5 g restraint aft and lateral. In addition, the cargo must have the structural integrity to withstand 4.5 g down.

Military Tactical Aircraft: There are varying restraint requirements for different rotary-wing aircraft and tilt-rotor aircraft. These are provided in the rotary-wing air transport section of this document. When internal transport is required by any of these aircraft, the item must be designed to meet the specific restraint requirements.

5.2 Rail Transportation.

5.2.1 General.

Equipment requiring rail transport must be capable of being loaded and transported with very little preparation and at gross weight (with full payload, see 3.20, that is, loaded to the gross weight rating). Preparation must be kept to a minimum and may include removing antennas, securing canvas and movable items (booms, gun barrels, turrets, outriggers, and so forth), and folding mirrors but must not include adding lumber or hardware items, which are not part of the BII for the equipment. The equipment must be capable of being secured to a flatcar and in turn capable of restraining its payload during rail shipment as verified by the rail impact test (see 5.2.5 and 5.7). Full payload (gross weight) testing is required even for equipment that does not meet the various clearance diagrams. Consideration in design must be given to the space required for tiedowns between coupled vehicles such as trucks and trailers, semitrailers, and other towed items. Loading for vehicles will generally be by the circus loading method, and time will not be available for involved tiedown schemes devised to overcome transportability shortcomings. Items developed for movement by the rail mode should meet the limitation imposed by physical, legal, and administrative characteristics of rail lines worldwide. This document presents the most significant constraints of North American and foreign rail systems. These criteria establish guidelines to ensure that

new military equipment requiring rail transport is compatible with the capabilities and limitations of North American and foreign rail systems.

5.2.2 North American rail.

5.2.2.1 Railcar availability.

Typical North American railcars and their dimensions are shown in table 2. Figure 1 shows typical dimensons of a bi-level flatcar. A description of cars, including numbers and types of cars available in North America, is given in *The Official Railway Equipment Register*. The information in this register is for railcars listed in the UMLER file, thereby meeting rule 90f of the *Field Manual of the AAR Interchange Rules*. Rule 90f prohibits the use of railcars not listed in the UMLER files for interchange from one rail line to another. Normally, transportability problem items will require movement on open-top railcars, that is, flatcars. New items of equipment shall be designed such that they will fit on at least one type of the flatcars listed in table 2, when rail transport is a requirement.

5.2.2.2 Unrestricted transport.

For generally unrestricted movement in North America, the height and width of a loaded flatcar shall remain within the limitations of the AAR outline Diagram for Single Loads, Without End Overhang, on Open-Top Cars (AAR diagram) (see fig 2). A loaded flatcar meeting the confines of this diagram will be capable of unrestricted transport in North America except on a very few rail lines generally considered unimportant for DOD use. Loads wider than the flatcar, or combined load plus flatcar heights greater than 15 feet 1 inch (4597 mm) above the top of the rails, are considered “dimensional loads.” All involved railroad companies will perform clearance checks on “dimensional loads” for the entire distance of shipment before such shipments will be accepted. Clearance checks may delay rail transport because they are performed during normal working hours. When a load overhangs the sides of a flatcar, the width is measured as two times the largest distance from the flatcar centerline to outside edge of load. For clearance purposes, this distance is the least critical when the load is centered on the flatcar centerline. Loading instructions are to measure the overhang on both sides from the car side to the widest part of the vehicle. The allowable variation is when the two measurements, one subtracted from the other, have a difference of 1 inch or less. This results in the load’s longitudinal centerline being no more than 1/2-inch away from the flatcar’s longitudinal centerline. When flatcars are requested from a railroad company on short notice, the railroad company will furnish what is readily available. Deck heights of flatcars can vary. For these reasons, unrestricted rail transport is based on a “standard deck height” railcar. Based on the deck heights of flatcars listed in *The Official Railway Equipment Register,* the “standard deck height” is 51 inches above the top of rails. When unrestricted North American rail transport is a requirement, new items of equipment shall be designed such that the item outline is within the AAR diagram (see fig 2) when placed on a 51-inch-high flatcar.

Table 2. Typical North American railcar characteristics

Type Railcar and Designation if any [1]	Typical Deck Length (ft, mm, in)	Typical Deck Width (ft, mm, in)	Typical [2] Load Limit (lb, kg)	Typical deck height above top of rail (ft, mm, in)	Approximate Number Available [3]	Notes
Flatcars ITTX and similar	89 27 127 1068	8.5 2591 102	140,000 63 500	3.50 1067 42	1500 [4]	4-axle, cushioned draft gear flatcar equipped with 3/8-in. chains. Chains have working load limit of 9,000 lb. Also equipped with special adjustable and foldaway pedestals.
Flatcars TTDX and similar	89 27 127 1068	8.5 2591 102	140,000 63 500	3.50 1067 42	300	4-axle, cushioned draft gear flatcar equipped with 1/2-in. chains. Chains have working load limit of 11,250 lb.
Flatcars OTTX and similar	60 18 288 720	10.5 3200 126	144,000 65 300	3.75 1143 45	1,700 [4] (1,168)	4-axle, cushioned draft gear flatcar equipped with 3/8-in. chains. Chains have working load limit of 9,000 lb.
Flatcars HTTX and similar	60 18 288 720	10.5 3200 126	146,000 66 200	3.75 1143 45	900 [4] (775)	4-axle cushioned draft gear flatcar equipped with heavy duty tiedowns. Equipped with 1/2-in. chains with working load limit of 13,750 lb.
Flatcars MTTX and similar	60 18 288 720	10.5 3200 126	148,000 67 100	3.50 1067 42	400 [4]	4-axle, basic multipurpose cushioned draft gear flatcar with plain wood deck and stake pockets, but no chains.
Flatcars DODX 40000-series	68 20 726 816	10.4 3175 125	298,000 135 200 (140-ton nominal capacity)	14.08 1245 49	566	Heavy duty, 6-axle, cushioned draft gear flatcar with 1/2-in. chains with working load limit of 13,750 lb and lift -up container pedestals.
Flatcars DODX 41000-series	68 20 726 816	10.5 3200 126	180,000 81 600	4.17 1270 50	256	4-axle, steel-deck, cushioned draft gear flatcar equipped with 1/2-in. chains with working load limit of 13,750 lb and lift-up container pedestals.
Flatcars DODX 42000-series	89 27 127 1068	9.5 2896 114	164,000 74 400	4.25 1295 51	334	4-axle, steel-deck, cushioned draft gear flatcar equipped with 1/2-in. chains with working load limit of 13,750 lb and lift-up container pedestals.
Flatcars XXTX 142275 to 142499	89 27 229 1072	9.3 2819 111	205,900 93 395	3.67 1118 44	222	4-axle, steel deck, cushioned draft gear, 160 chain anchor holes 20 inches from centerline for removable chain anchor chain assemblies to be supplied by shipper. Suitable for a working load limit of 13,750 lb. 16 slots for railroad type interbox connectors (IBC) for 20 or 40 foot containers. 4 stake pockets per end, 20 stake pockets per side.

Table 2. Typical North American railcar characteristics - continued

Type Railcar and Designation if any [1]	Typical Deck Length (ft, mm, in)	Typical Deck Width (ft, mm, in)	Typical [2] Load Limit (lb, kg)	Typical deck height above top of rail (ft, mm, in)	Approximate Number Available [3]	Notes
Flatcars, Others (cushioned and standard draft gear)	51.3 15 645 616	10.0 3200 126	100,000 to 140,000 45 400 to 63 500	4.17 1270 50	widely available [5]	Flatcars may have standard or cushioned draft gear.
	TO					
	89.3 27 228 1072	8.5 2591 102				
Boxcars	50.5 15 392 606	9.6 2920 115	100,000 to160,000 45 400 to 72 600	4.17 1270 50	widely available [5]	Boxcars may have standard or cushioned draft gear.
	TO					
	86.5 26 365 630	9.2 2896 114				
Gondolas	46.0 14 021 552	9.6 2920 115	140,000 to200,000 63 500 to 90 700	4.17 1270 50	widely available [5]	Gondolas may have standard or cushioned draft gear.
	TO					
	52.5 16 002 630	9.5 2896 114				
COFC (Container on flatcar railcars)	Suitable for 20-foot and 40-foot ISO containers		Limited by container	Variable	32,660	Of these, 12,872 are double stack cars typically used in special service not available in all areas.
TOFC (Trailer on flatcar railcars	Suitable for semi-trailers up to 53 ft 16 150 mm, 36 in long		140,000 63 503	3.75 1143 45	Widely available [5]	Suitable only for semitrailers with 2-inch (50.8 mm) king pins. Many are only suitable for 102-inch (2590.8 mm) wide semitrailers.
Bi-Level Flatcars	See Figure 1		40,000 per deck 80,000 total 18 140 per deck 36 280 total	3.46 1054 41.5	30,000	Suitable for HMMWVs and trailers. Most are equipped with the Grate Lock Chocking System (GLCS) rather than chains.

[1] See the definition of “reporting marks” in section 3 for an explanation of flatcar designations.
[2] See section 3 for definition of load limit. The ability of general service flatcars (excluding 84- and 89-foot flatcars) to carry a single heavy vehicle is usually limited to 75% of the load limit, depending on length of the vehicle and design of the flatcar. Gondolas and boxcars have similar restrictions. The 84- and 89-foot flatcars cannot carry concentrated loads. They are generally used to carry multiple lighter items.
[3] Data source - *The Official Railway Equipment Register,* RER Publishing Corporation, Jul 03.
[4] For the ITTX, HTTX, OTTX and MTTX flatcars, the number given denotes the total number of flatcars that have that or a similar designation. The number in parentheses for the HTTX, OTTX and MTTX denotes the number of flatcars that meet Note 3 in the Trailer Train Company section of the *The Official Railway Equipment Register.* Note 3 states, “These 60-ft flatcars are capable of carrying 90% of the load limit over a centered 14 ft.” This means these flatcars can transport tanks weighing up to about 64.8 tons (58 786 kg).
[5] The term “widely available” means that railcars of this type are abundant; however, a specific car may not be readily available.

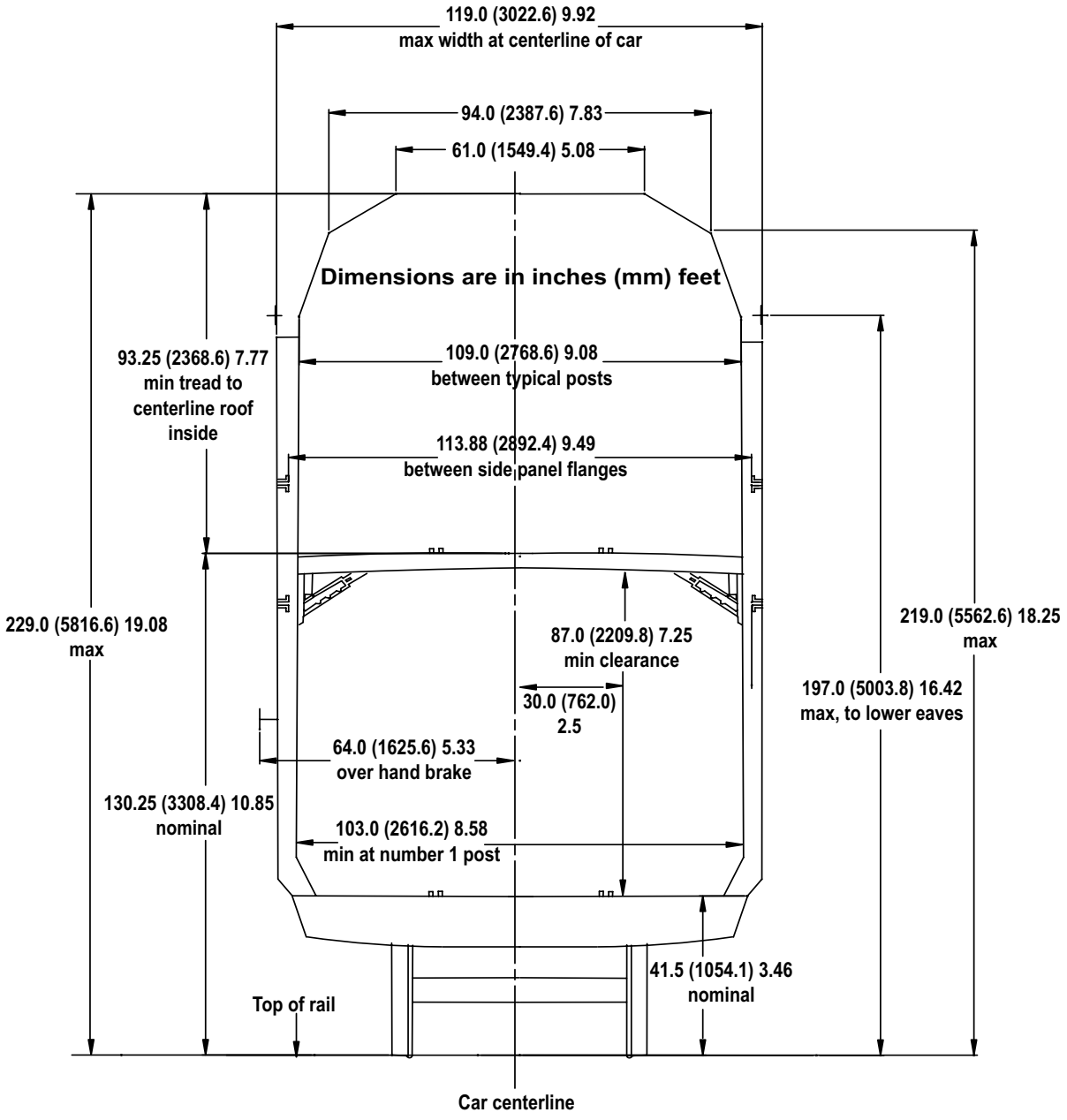

Figure 1. Typical Dimensions of a Bi-level Flatcar.

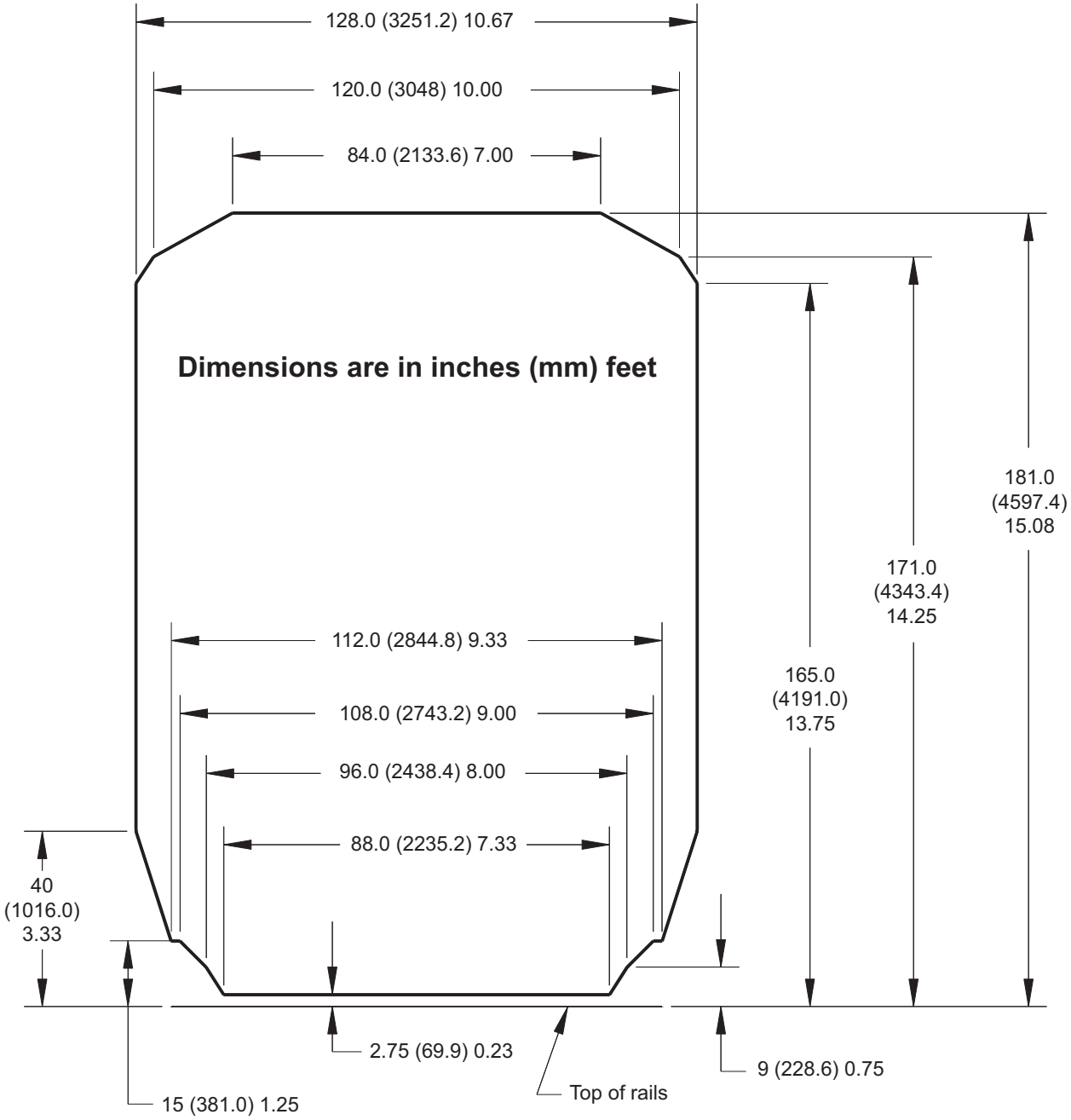

Figure 2. AAR outline diagram of single loads, without end overhang, on open-top cars (AAR diagram).

5.2.2.3 CONUS transport for equipment exceeding the AAR diagram.

For large equipment that cannot meet the AAR diagram, a special DOD rail clearance diagram has been developed (see fig 3). Meeting the DOD diagram assures strategic transport over rail lines considered important to the national defense, but administrative delays are possible due to checking of clearances. When meeting the DOD diagram is a requirement, new items of equipment shall be designed such that the item outline is within the DOD diagram when placed on a 51-inch-high flatcar.

5.2.2.4 Typical vehicle loading on flatcars.

Figures 4-5 show typical loading of vehicles on flatcars.

5.2.3 Foreign Rail.

5.2.3.1. NATO railcar availability.

The flatcars listed in table 3 represent those available for military transport in NATO countries. Railion, the railroad company in Germany, formerly known as DB (which stood for Deutsche Bundesbahn or Die Bahn) manages the flatcars for western Europe. The types and availability of railcars in other foreign countries vary from country to country. Items of equipment shall be designed to fit on the flatcars listed in table 3, when rail transport in NATO countries is a requirement.

Table 3. Characteristics of Railion (formerly DB) flatcars

Designation of flatcars	Description of flatcars	Typical Deck Dimensions Length by Width (mm, ft, in)	Deck height above top of rail (mm, ft, in)	Typical Load Limit (kg, lb)	Approximate Number Available
Ks/kbs/kls	Light duty flatcar, 2-axle, with removable side and end walls	12 500 by 2770 41.0 by 9.1 492 by 109	1238 4.06 48.7	27 000 59,500	5,100
Rs	Heavy duty flatcar, 4-axle	18 500 by 2770 60.7 by 9.1 728 by 109	1305 4.28 51.4	50 500 111,300	2,800
Res	Heavy duty flatcar, 4-axle, with removable side walls	18 500 by 2770 [1] 60.7 by 9.1[1] 728 by 109 [1]	1238 4.06 48.7	55 000 121,250	4,100
Rmms/Remms	Heavy duty flatcar, 4-axle, has dropsides	12 644 by 2904[1] 4.5 by 9.5[1] 498 by 114.3[1]	1260 4.13 49.6	57 500 126,760	1,200
Rlmmps	Heavy duty flatcar, equipped with stakes, 4-axle, does not have bulkhead	8800 by 3150 28.9 by 10.3 346.5 by 124.0	1291 4.24 50.8	54 000 119,050	300
Samms	Heavy duty flatcar, 6-axle	15 000 by 3110[1] 49.2 by 10.2[1] 591 by 122 [1]	1300 4.27 51.2	65 000 143,300	3,600

1.The Res, Remms and Samms flatcars have drop sides or stakes. The widths shown are the full widths of these flatcars. For unrestricted rail transport, the designer should use the following as the maximum item/system width :
Res - 2649 mm (8.69 feet, 104 in.)
Remms - 2774 mm (9.1 feet, 109 in.)
Samms - 2557 mm (8.39 feet, 101 in.)

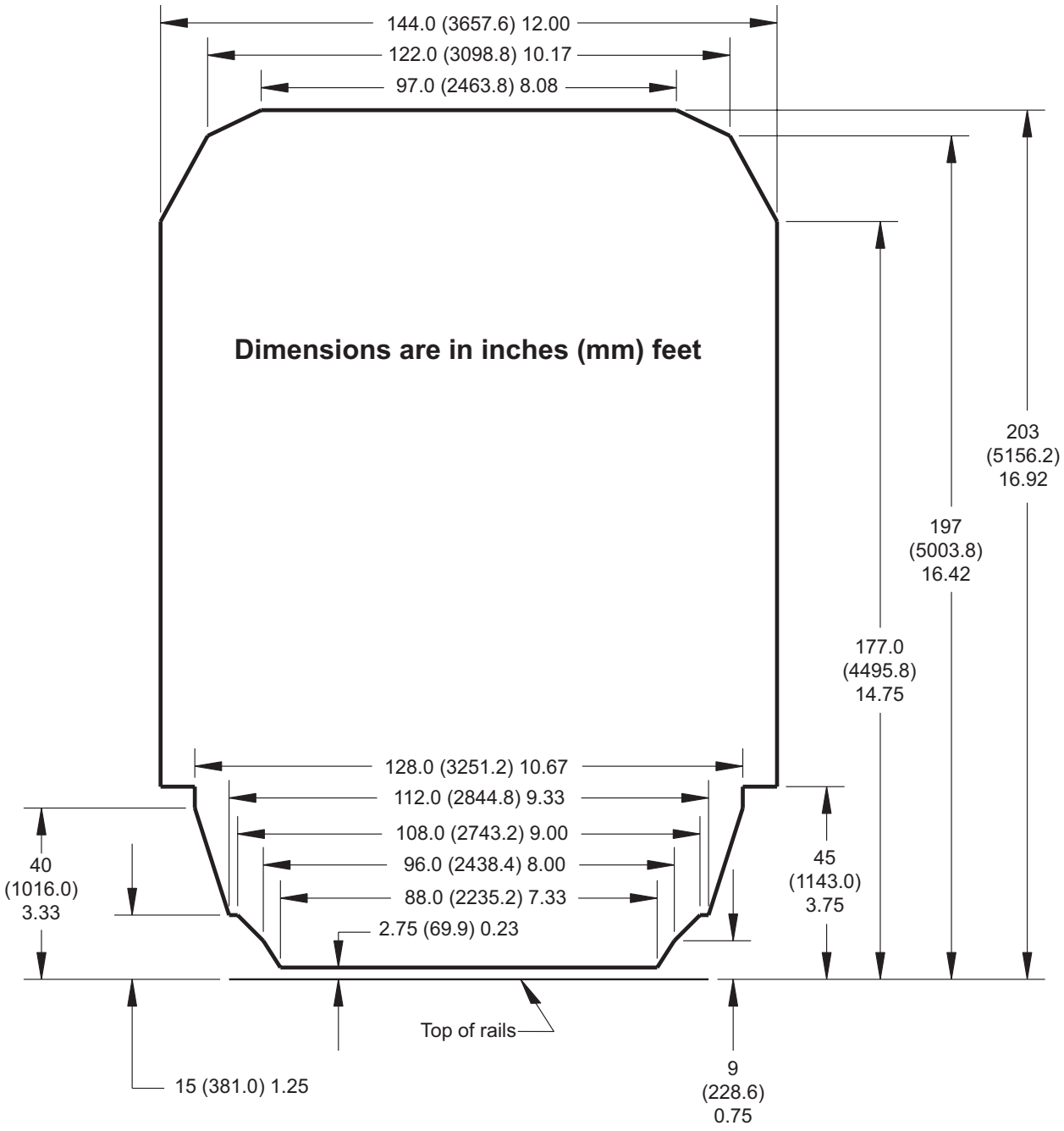

Figure 3. DOD rail clearance diagram.

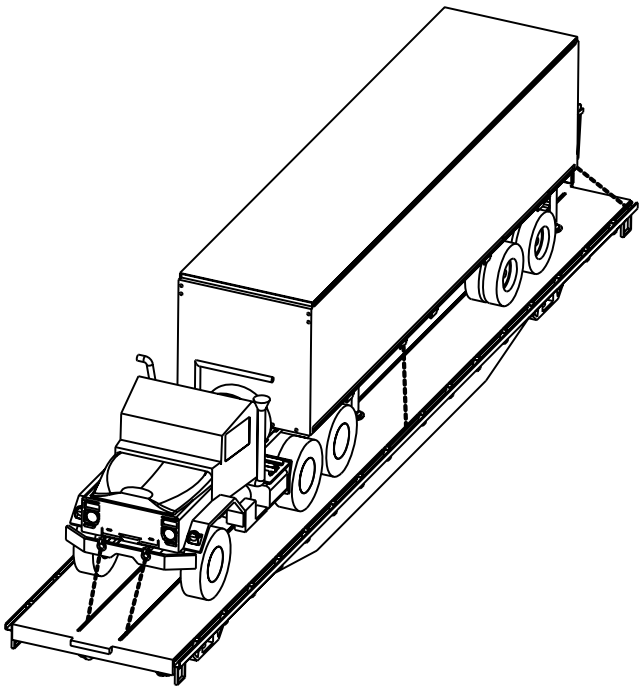

Figure 4. Typical vehicle loading on HTTX flatcar (the OTTX layout is similar).

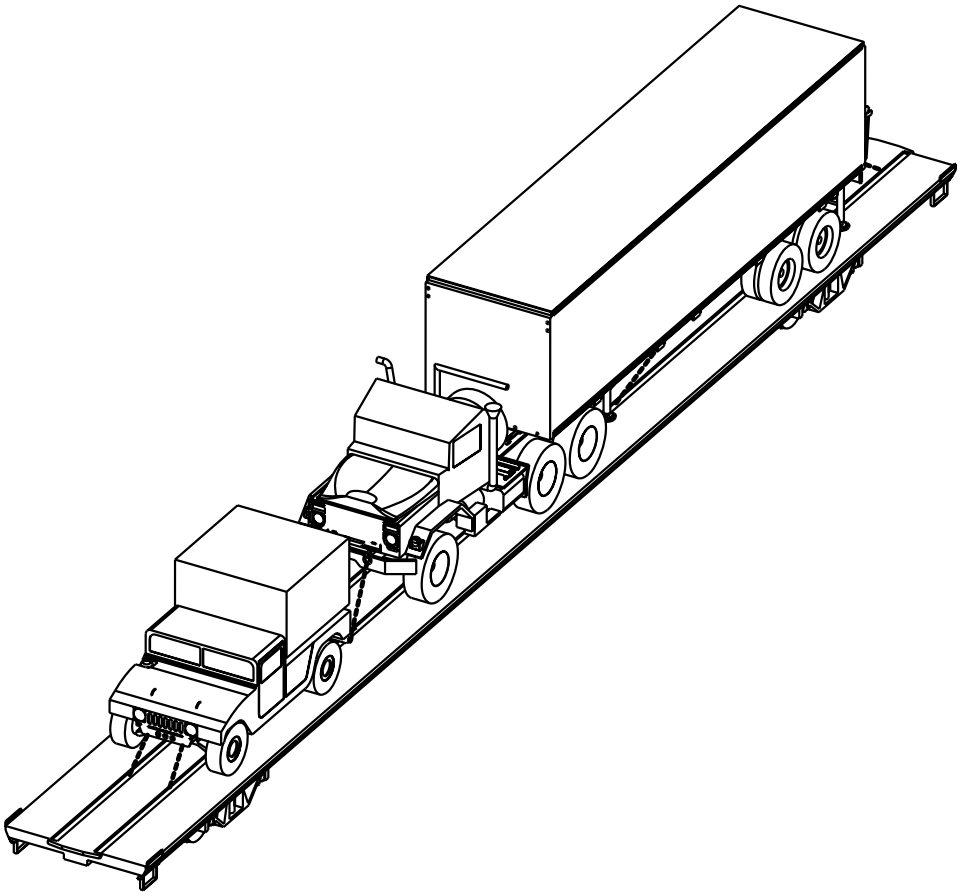

Figure 5. Typical vehicle loading on TTDX flatcar (the ITTX layout is similar).

5.2.3.2 NATO Rail.

When unrestricted foreign rail transport is a requirement, the item of equipment shall be designed to meet requirements (1) through (5) in the definition of ordinary transport military equipment (see 5.2.3.2a) when placed on a 1305 mm (4.28 ft, 51.4 in.) high flatcar. STANAG 2175 defines two types of equipment - ordinary transport military equipment and exceptional transport military equipment. This is based on the Rs flatcar. Table 3 shows that the worst-case for European rail transport is the Rs flatcar.

a. Ordinary transport military equipment. Ordinary transport military equipment consists of wheeled vehicles, tracked vehicles, and equipment that presents all the following characteristics:

(1) Indivisible weight not exceeding 20 000 kg (44,092 lb).

(2) Length not exceeding 12 500 mm (41.01 ft, 492.1 in.).

(3) Load distribution: 16 500 kg (36,376 lb) maximum over a length of 25 000 mm (8.20 ft, 98.4 in.).

(4) Require no lowering of the carrying flatcar's drop sides.

(5) The flatcar/equipment unit conforms to the Gabarit International de Chargement (GIC), with a loading tolerance of 15 mm (0.59 in.) per half-width. The 15 mm (0.59 in.) per half-width tolerance allows for some error in the placement of an item on a railcar. In other words, the equipment must be within the GIC by at least 15 mm (0.59 in.) measured horizontally.

b. Exceptional transport military equipment. Exceptional transport military equipment consists of wheeled vehicles, tracked vehicles, and equipment that present at least one of the following characteristics:

(1) Indivisible weight over 20 000 kg (44,092 lb).

(2) Length over 12 500 mm (41.01 ft, 492.1 in.).

(3) Load distribution: more than 16 500 kg (36,376 lb) over a length of 25 000 mm (8.20 ft, 98.4 in.).

(4) Require lowering of flatcar's drop sides. (see table 3)

(5) The flatcar/equipment unit is not in conformity with (exceeds) the GIC diagram (see fig 6). The GIC diagram does not include the 15 mm (0.59 in.) per half-width tolerance.

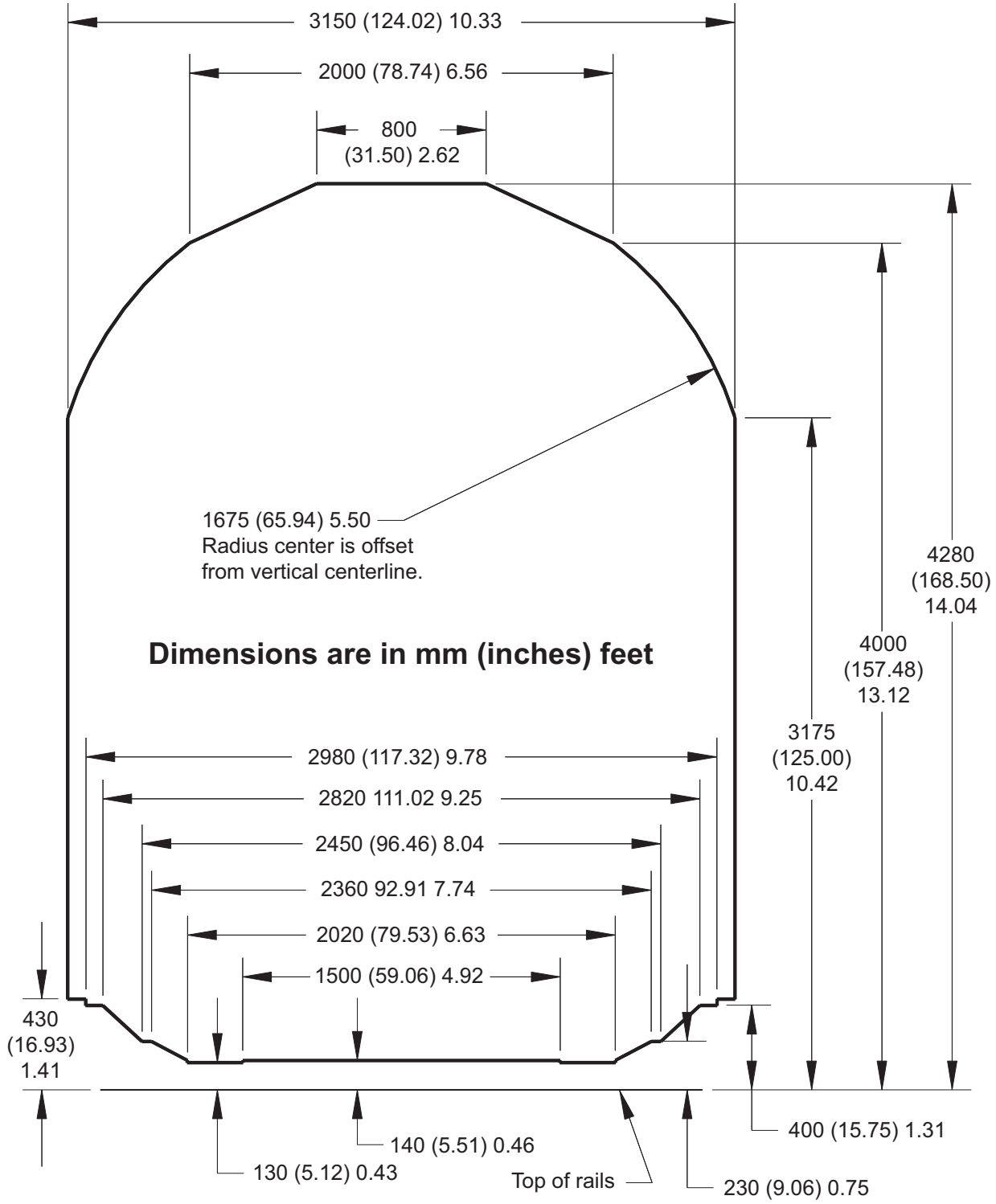

Figure 6. GIC Diagram.

c. Military equipment not ordinary or exceptional for transport. Items that have dimensions that exceed the ordinary transport criteria but do not exceed the GIC diagram (see fig 6) are not classified as either ordinary or exceptional transport. These items must be centered on the flatcar longitudinal centerline to avoid an exceptional transport military equipment classification.

5.2.3.3 NATO rail transport on major rail lines.

Items of equipment that do not meet GIC diagram clearances may still be transported on the major NATO rail lines provided they meet envelope M (see fig 7). When transport on major NATO rail lines is a requirement, the item of equipment shall be designed to be within the envelope M gauge when placed on a 1305 mm (4.28 ft, 51.4 in.) high flatcar.

5.2.3.4 Other foreign rail clearances.

Rail transport clearances in foreign countries other than NATO will vary from country to country. Information on Korean flatcars is listed in table 4 and the Korean rail clearance diagram is shown in figure 8. For simplicity, when unrestricted foreign rail transport in countries other than NATO and Korea is a requirement, the item shall meet the requirements of paragraph 5.2.3.2, unless specific detailed requirements are known.

Table 4. Korean flatcar characteristics

Designation of flatcars	Description of flatcars	Typical Deck Length (mm, ft, in)	Typical Deck Width (mm, ft, in)	Deck height above top of rail (mm, ft, in)	Typical Load Limit (kg, lb)	Approximate Number Available
50T	6-axle	15000 49.21 590.6	2900 9.51 114.2	1200 3.94 47.2	49 986 110,200	600
70T	6-axle	15300 50.20 620.4	3500 11.48 137.8	1400 4.59 55.1	69 853 154,000	120

5.2.4 Comparison of loading diagrams.

When the various loading diagrams are superimposed (see fig 9), it becomes clear that meeting one diagram does not ensure meeting others.

5.2.5 Rail impact testing.

Rail transport in North America subjects items of equipment to severe longitudinal forces. Therefore, items of equipment requiring rail transport must undergo testing to determine suitability for rail transport. The MIL-STD-810 rail impact test is used to validate the structural integrity of the item and the adequacy of the item's tiedown provisions and procedures. Any item that passes the MIL-STD-810 test should be capable of rail transport without damage to the item or tiedowns.

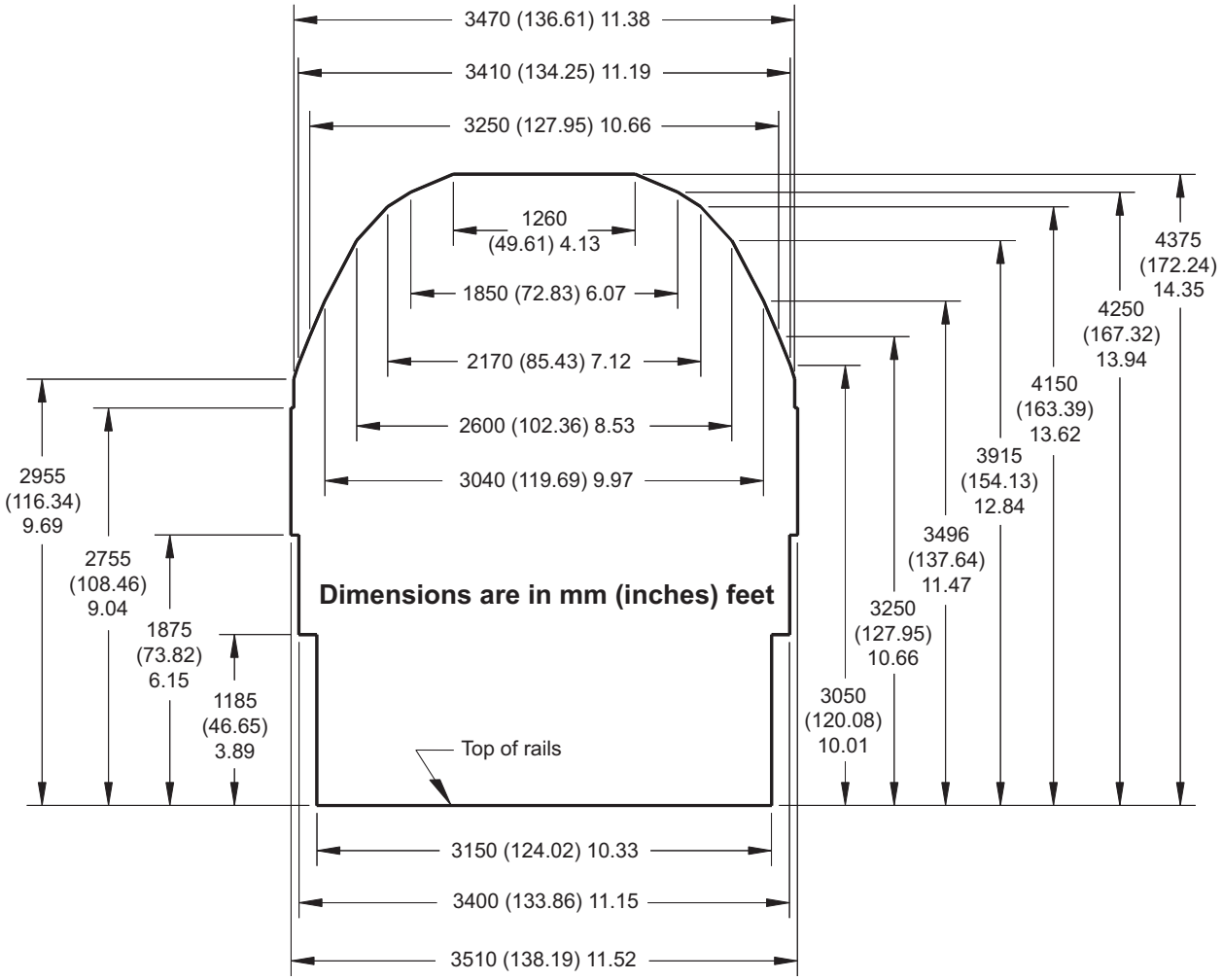

Figure 7. NATO Envelope M (formerly Envelope B).

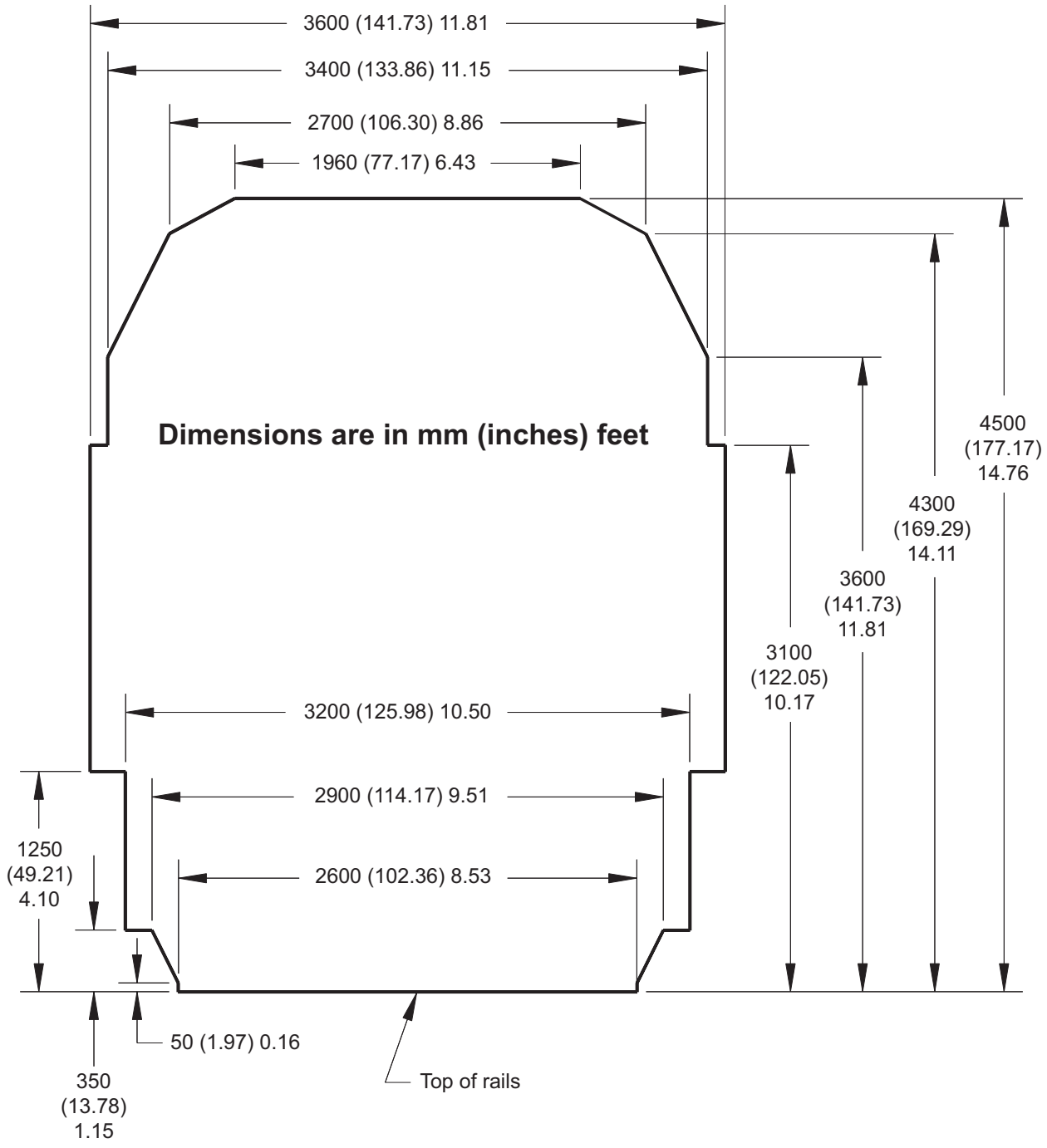

Figure 8. Korean clearance diagram.

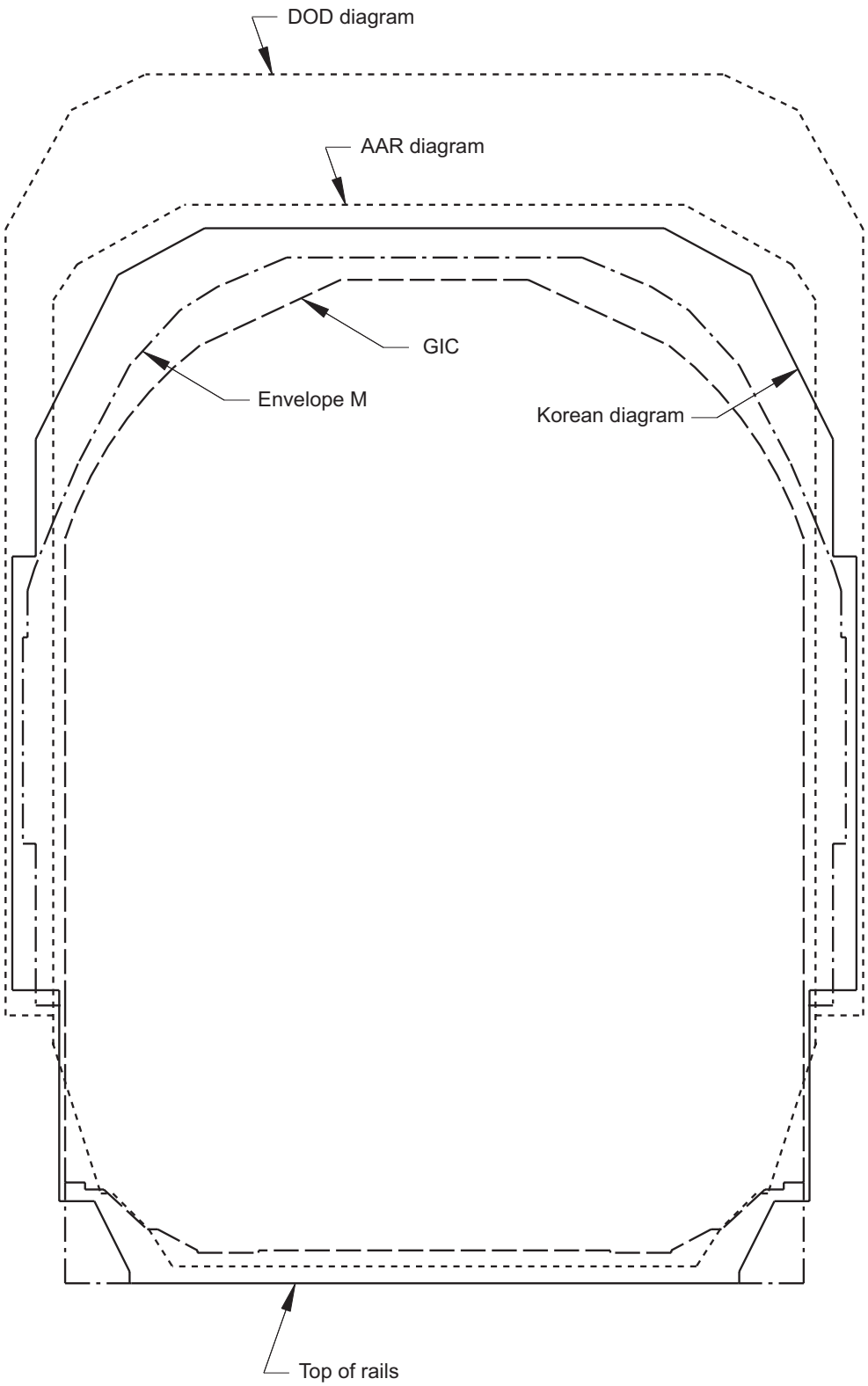

Figure 9. Comparison of loading diagrams.

5.3 Water Transportation.

5.3.1 General.

Water transport is used for both strategic and tactical deployments. During strategic deployment, the majority of U.S. Army equipment will be transported by ship. Marine Corps equipment belonging to the assault follow-on-echelon (AFOE) will be transported by strategic sealift ships. The Military Sealift Command (MSC) provides common-user sealift across the range of military operations. Under normal peacetime conditions, the MSC force consists of government-owned ships as well as privately owned ships under charter to MSC. MSC resources available to the DTS beyond MSC's active peacetime fleet are fast sealift ships (FSS), large medium-speed roll-on/roll-off (LMSR) ships, and pre-positioned ships. As a key element of sea basing, afloat pre-positioning provides the military equipment and supplies for a contingency forward deployed in key ocean areas before it is needed. The MSC Pre-positioning Program supports the U.S. Army, Navy, Air Force, Marine Corps, and the Defense Logistics Agency. Pre-positioning ships remain at sea, ready to deploy on short-notice the vital equipment, fuel and supplies to initially support our military forces in the event of a contingency. The Pre-positioning Program consists of 34 at-sea ships plus 2 aviation support ships kept in reduced operating status. These ships are pre-loaded with military equipment and supplies needed for a war or other contingency and they are strategically positioned in key ocean areas. The Prepositioning Program is divided into three separate elements: the Combat Prepositioning Force (CPF), the Maritime Prepositioning Force (MPF) and the Logistics Prepositioning ships. Sixteen MPF ships carry equipment and supplies for the U.S. Marine Corps. Currently, 10 CPF ships provide quick-response delivery of Army equipment for ground forces from strategic locations in the world's oceans. Ten Logistics Prepositioning Force ships (mostly tankers and dry cargo ships) are loaded primarily with Defense Logistics Agency fuels, Air Force ammunition, Marine Corps aviation support equipment, and Navy munitions. The MPS and APS ships are available for common use after initial discharge and release by the theater commander.

The Maritime Administration (MARAD) is the DOT agency responsible for administering federal laws and programs designed to support and maintain a U.S. merchant marine capable of meeting the Nation's needs. It is responsible for managing the National Defense Reserve Fleet (NDRF), which contains the Ready Reserve Fleet (RRF). As of February 2006, the RRF consists of 58 reserve ships maintained and crewed by MARAD and which can be activated in 4, 5, 10 or 20 days. MSC inspects the ships and accepts them. When activated, RRF ships come under the operational control of MSC. The RRF includes government-owned tankers, crane ships, roll-on/roll-off (RORO) ships, lighter aboard ships, modular cargo delivery system ships, and heavy lift ships. Because of their configurations, RRF ships are uniquely capable of handling bulky, oversized military equipment. The shortage of RORO ships in the U.S. commercial market makes the RRF especially valuable.

The U.S. commercial dry cargo fleet consists of four conventional ship types: breakbulk, container, barge carriers, and RORO. Various combinations of these four ship types also exist. For example, combination container/breakbulk, container/RORO, and container/barge vessels are in service.

For additional information on maritime vessels not covered in this standard, please see TEA Pamphlet 700-4, *Vessel Characteristics for Shiploading*, available at http://www.tea.army.mil/pubs/pubs_order.htm.

5.3.2 Breakbulk general-cargo ships.

Breakbulk vessels are designated as such because of their ability to carry a variety of cargoes in various forms. These vessels can transport bagged, boxed, palletized, refrigerated, and limited containerized cargo. The configuration of a conventional breakbulk vessel is a weather deck with a series of cargo holds beneath. The cargo holds are divided by 'tween' decks and accessed by a series of hatches. Cargo operations on a breakbulk vessel are lift on/lift off (LOLO). Since each hold on a breakbulk vessel is serviced by ship's gear (booms, cranes, winches, and so forth), these vessels are considered to be self-sustaining. Although the breakbulk vessel is not the preferred vessel to transport tracked and wheeled military equipment, it does have the capability to offload equipment without the use of shoreside cranes. The normal constraints encountered with breakbulk vessels are low overhead clearances, limited deck strengths, limited lifting capability of ship's gear, and slow speed of cargo operations. Table 5 gives dimensional and weight capability data for two representative classes of breakbulk vessels.

5.3.3 Containerships.

5.3.3.1 General.

Modern containerships (including combination ships) are designed to carry all or part of their cargo load in containers/flatracks (20 (6.1 m) or 40-foot-long (12.2 m)). The containership allows containers to be secured without use of dunnage. Containerships also have the capability for transporting containers that are stacked on the hatch covers. S/E is transportable on containerships within containers, on flatracks, or on the hatch covers.

5.3.3.2 Full containerships.

These vessels carry containers/flatracks as their normal full cargo load and have little or no capability for carrying other types of cargo except for the cargo placed on the hatch covers. Containerships are configured for the stacked stowage of containers both in the space below the main deck and on the main deck (frequently referred to as the weather deck). Since the vast majority of containerships are non-self-sustaining (that is, lack an installed crane system), cargo operations require the use of shoreside container gantry cranes, floating derrick cranes or auxiliary crane ships (T-ACS). Under certain circumstances, mobile cranes could be placed on the weather deck of containerships to

Table 5. Deck and hatch characteristics of typical breakbulk vessels

MARAD Design	Hold No.	Hatch Opening Length by Width (ft, m) [1]	Height in Hold Minimum to Maximum (ft, m) [2]	Allowable Deck Load Minimum to Maximum (lb per ft², kPa)	Boom Lift Capacity (LTON, lb, kg)
Cape G Class (2 ships)	1	28' 6" by 22' 6" 8.9 by 6.9	7' 8" to 18' 0" 2.3 to 5.5	335 to 1,750 16 to 83.8	13.4, 30,000, 13 615
	2	42' 6" by 24' 6" 13.0 by 7.5	8' 10" to 18' 3" 2.7 by 5.6	335 to 1,875 16 to 83.8	35.8, 80,000, 36 374
	3	21' 3" by 25' 6" 6.5 by 7.8	8' 10" to 9' 4" 2.7 by 2.8	335 to 1,875 16 to 83.8	17.8, 40,000, 18 085
	4	42' 6" by 25' 6" 13.0 by 7.8	8' 2" to 9' 0" 2.5 by 2.7	335 to 1,875 16 to 83.8	35.8, 80,000, 36 374
	5	17' 6" by 25' 6" 9.09 by 7.59	8' 9" to 14' 6" 2.6 to 4.4	335 to 1,250 16 to 59.8	17.8, 40,000, 18 085
	6	35' 0" by 25' 6" 10.7 by 7.8	9' 2" to 14' 4" 2.8 by 4.3	335 to 785 16 to 37.5	35.8, 80,000 36 374
	7	27' 6" by 25' 6" 8.4 by 7.8	8' 6" to 15' 0" 2.6 by 4.5	335 to 785 16 to 37.5	13.4, 30,000, 13 615
Pioneer Cmdr (+ 2 sister ships)	1	27' 0" by 16' 0" 8.23 by 4.88	7' 10" to 13' 2" 2.39 to 4.01	400 to 1,000 19.3 to 47.6	10, 22,400, 10,000
	2	42' 6" by 23' 0" 12.95 by 7.01	10' 3" to 12' 2" 3.12 to 3.71	495 to 1,865 30.0 to 89.3	10 and 15 22,400 and 33,600 10,000 and 15,000
	3	42' 6" by 16' 0" 12.95 by 4.88	8' 7" to 14' 10" 2.62 to 4.52	430 to 1,740 20.6 to 83.4	10 and 15 and 70 22,400 and 33,600 and 156,800 10,000 and 15,000 and 70,000
	4	42' 6" by 23' 0" 12.95 by 4.88	7' 11" to 14' 10" 24.13 to 45.21	390 to 1,740 18.7 to 82.3	10 and 15 and 60 22,400 and 33,600 and 134,400 10,000 and 15,000 and 60,000
	5	35' 0" by 23' 0" 10.69 by 7.01	8' 3" to 12' 11" 25.15 to 39.37	380 to 1,630 18.2 to 78.1	10 and 15 22,400 and 33,600 10,000 and 15,000
	6	35' 0" by 23' 0" 10.69 by 7.01	7' 9" to 8' 8" 23.11 to 26.42	390 to 1,260 18.7 to 60.3	10, 22,400, 10,000

1. Values given are actual dimensions. For design purposes, subtract 12" (.3 m) from the listed values to ensure adequate clearance.
2. Values given are actual dimensions. For design purposes, subtract 6" (.15 m) from the listed values to ensure adequate clearance. The higher values are directly under the hatches.

facilitate the offload of containers at unimproved ports. This was successfully tested in two Turbo CADS exercises.

5.3.4 Combination ships.

A combination vessel employs the cargo operation features of the combined ship types making up its configuration. For example, a combination RORO and container vessel may have a stern ramp, RORO decks, and holds configured for the stowage of containers. Table 6 provides the characteristics for carrying breakbulk cargo on combination ships.

5.3.5 Barge Carriers

5.3.5.1 General.

Barge carriers are designed to carry specially designed barges or a combination of such barges and containers. These barges are loaded or discharged at berths by shore-based cranes. When cargo operations are complete, the barges are ferried by tugs or other similar watercraft to the barge carrier, or mothership, where the barges are brought aboard the vessel. The two types of barge carrying systems are the lighter aboard ship (LASH) and the sea barge (SEABEE). The basic differences between the two types of barge carriers are their methods of discharging, retrieving, and stowing barges.

5.3.5.2 LASH.

The LASH is a single-decked vessel with large hatches, wing-tank arrangements, and a clear access to the stern. The LASH has a rail-mounted gantry crane with a cargo handling capability of up to 446 LT (999,040 lb, 453 157 kg). This crane can travel the entire length of the cargo area. The function of this crane is to convey barges or lighterage from the stowed location aboard the ship to the stern region and to lower the barges or lighterage into the water. Different classes of LASH ships have capacities ranging from 49 to 89 barges or a mixture of LASH barges and military lighterage.

5.3.5.3 LASH Lighters (barges).

Figure 10 shows specific LASH barge characteristics. The interior of the barge is fitted with two levels of tiedowns. The first level consists of five tiedowns per side and four per end and are located 2 feet 6 inches (.76 m) above the deck. The second level has the same number of tiedowns as the first level, located 8 feet (2.44 m) above the deck. The external dimensions of LASH barges are 61 feet 6 inches long by 31 feet 2 inches wide with a clear hatch opening of 26 feet by 44 feet. The internal dimensions are 59 feet 11 inches long by 30 feet 1 inch wide. The minimum overhead clearance within the barge is 9 feet 11 inches. The barge has stacking spacers that provide about 1-foot of additional overhead clearance when the hatch covers of the individual barge are not used. The use of spacers provides an approximate class height of 13 feet 6 inches in the hatch square of the barge. The typical empty LASH barge weighs 80

Table 6. Deck and hatch characteristics of a typical combination vessel

MARAD Design Cape Nome Hold No.	Hatch Opening Length by Width (ft, m) [1]	Height in Hold Minimum to Maximum (ft, m) [2]	Allowable Deck Load Minimum to Maximum (lb per ft^2, kPa)	Boom Lift Capacity (LTON, lb, kg)
1	41' 11" by 8' 10" 12.77 by 2.69 (port and starboard) 41' 11" by 17' 3" 12.78 by 5.26 (center)	13' 1" to 22' 6" 3.98 to 6.86	380 to 810 18.19 to 38.78	5 11,200 5000
2	41' 11" by 17' 11" 12.78 by 5.46 (port and starboard) 41' 11" by 17' 3" 12.78 by 5.26 (center)	16' 0" to 22' 6" 4.88 to 6.86	340 to 810 16.28 to 38.78	30 67,200 30 000
3	41' 11" by 25' 8" 12.78 by 7.82 (port and starboard) 41' 11" by 17' 3" 12.78 by 5.26 (center)	13'7" to22' 6" 44.14 to 6.86	650 to 2,450 31.12 to 117.31	70 156,800 70,000
4	41' 11" by 25' 8" 12.78 by 7.82 (port and starboard) 41' 11" by 17' 3" 12.78 by 5.26 (center)	15' 9" to 22' 6" 4.80 to 6.86	650 to 2,450 31.12 to 117.31	30 and 70 67,200 and 156,800 30 000 and 70 000
5	41' 11" by 25' 8" 12.78 by 7.82 (port and starboard) 41' 11" by 17' 3" 12.78 by 5.26 (center)	15' 9" to 22' 6" 4.80 to 6.86	650 to 2,450 31.12 to 117.31	30 and 70 67,200 and 156,800 30 000 and 70 000
6	41' 11" by 25' 8" 12.78 by 7.82 (port and starboard) 41' 11" by 17' 3" 12.78 by 5.26 (center)	15' 9" to 22' 6" 4.80 to 6.86	650 to 2,450 31.12 to 117.31	30 67,200 30 000
7	41' 11" by 25' 8" 12.78 by 7.82 (port and starboard)	16' 9" to 22' 6" 5.11 to 6.86	190 to 490 9.10 to 23.46	5 11,200 5000

1. Values given are actual dimensions. For design purposes, subtract 12" (.3 m) from the listed values to ensure adequate clearance.
2. Values given are actual dimensions. For design purposes, subtract 6" (.15 m) from the listed values to ensure adequate clearance. The higher values are directly under the hatches.

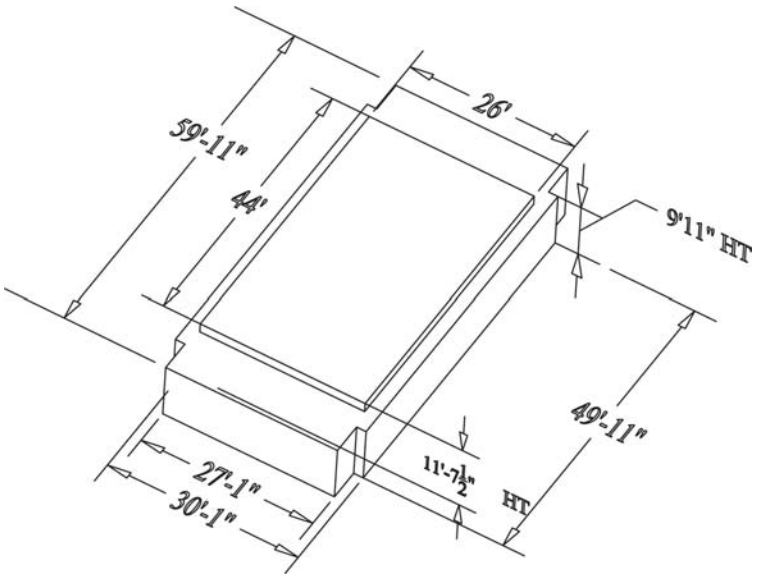

Figure 10. LASH barge characteristics.

LTON (179,200 lbs; 81 284 kg) and has an average cargo capacity of 370 LTON (828,800 lb; 375 937 kg) The draft ranges from 2 feet 9 inches to 8 feet from light to loaded, respectively.

5.3.5.4 SEABEE.

The SEABEE is arranged much differently from the LASH in that it has three decks on which the cargo barges are stowed. Barges are brought to each deck level by a stern mounted, submersible 2000 LTON (4,480,000 lb; 2 032 094 kg) ship's elevator and are moved internally within the ship by the Transporter (conveyor) System. Two barges can be loaded or discharged simultaneously in a cycle of about 40 minutes. The SEABEE ship is the preferred ship to transport Army watercraft such as the landing craft utility (LCU) and lighter amphibious resupply cargo (LARC). Each SEABEE carrier has a capacity of 38 barges, however, only 24 barges are currently available per vessel. The spatial characteristics of the SEABEE barge are shown in figure 11. The overhead clearance directly below the hatch opening is 14 feet 7 inches, and 3 feet from the forward and aft ends – the overhead clearance is 11 feet 3 inches. The clear opening, with all hatch covers removed, is 84 feet 0 inches by 30 feet 3 inches. The overhead clearance below the hatch opening of the barges loaded on the weather deck can be increased to 16 feet 11 inches by leaving off the hatch covers. The typical empty SEABEE barge weighs 166 LTON (371,840 lbs; 168 664 kg) and has a cargo capacity of 834 LTON (1,868,160; 847 383). The draft ranges from 1 feet 9 inches to 10 feet 7 inches from light to loaded, respectively.

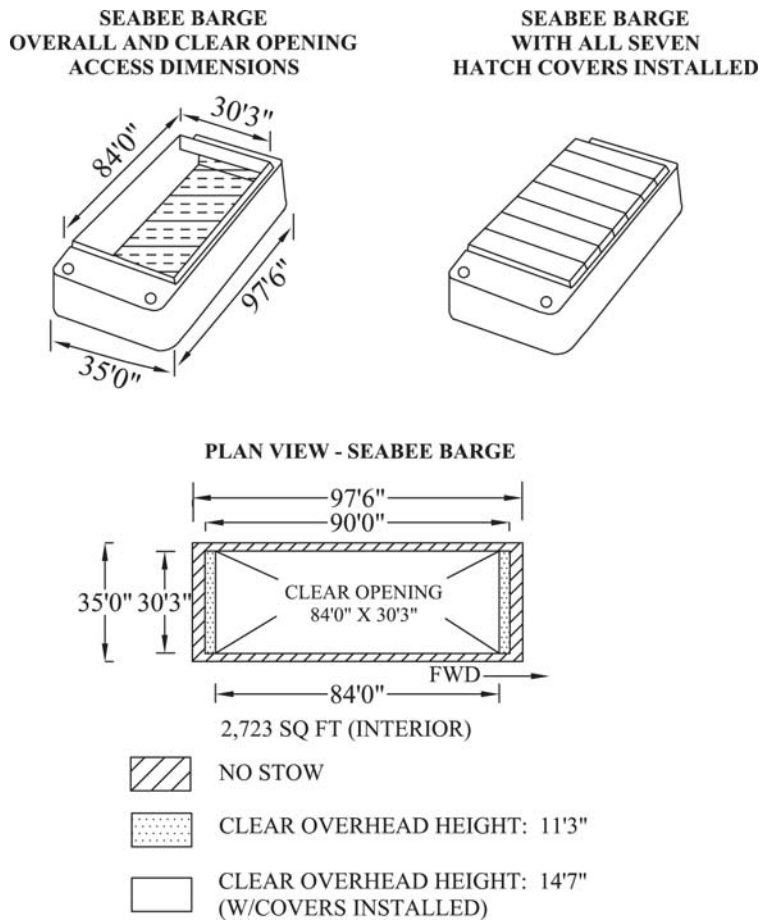

Figure 11. SEABEE barge dimensional data.

5.3.6 Roll-on/roll-off (RORO) ships.

5.3.6.1 General.

RORO vessels are designed primarily as vehicle transports. Some modern RORO vessels not only carry vehicles but also carry a combination of containers and/or breakbulk cargo. Cargo includes helicopters, wheeled, tracked, self-propelled, and towed vehicles. Rapid cargo loading and discharge rates characterize RORO vessels. The rapid movement of cargo is accomplished by a series of external and internal ramps. Most RORO ships have external ramps that rest on the pier, allowing access to the cargo holds. To maintain safe operations, the ramp angle for loading/unloading procedures is not greater than 15°. When designing wheeled or tracked equipment, the materiel developer/contractor must allow for adequate clearance underneath the vehicle to prevent contact at the ramp crest/toe for a 15° ramp and enough clearance above the vehicle to prevent projection interference problems. The cargo holds of RORO ships are typically large, open bays, where equipment may be driven into, parked, and lashed down. For this reason, RORO ships are considered to be self-sustaining. Because of the versatility of these vessels, they are ideally suited for the movement of unit equipment. Figure 12 illustrates traffic flow while loading a typical RORO ship.

Notes:
1. All hatch covers are closed.
2. All watertight doors are shown open.
3. A-B and B-C hoistable decks are in raised position.

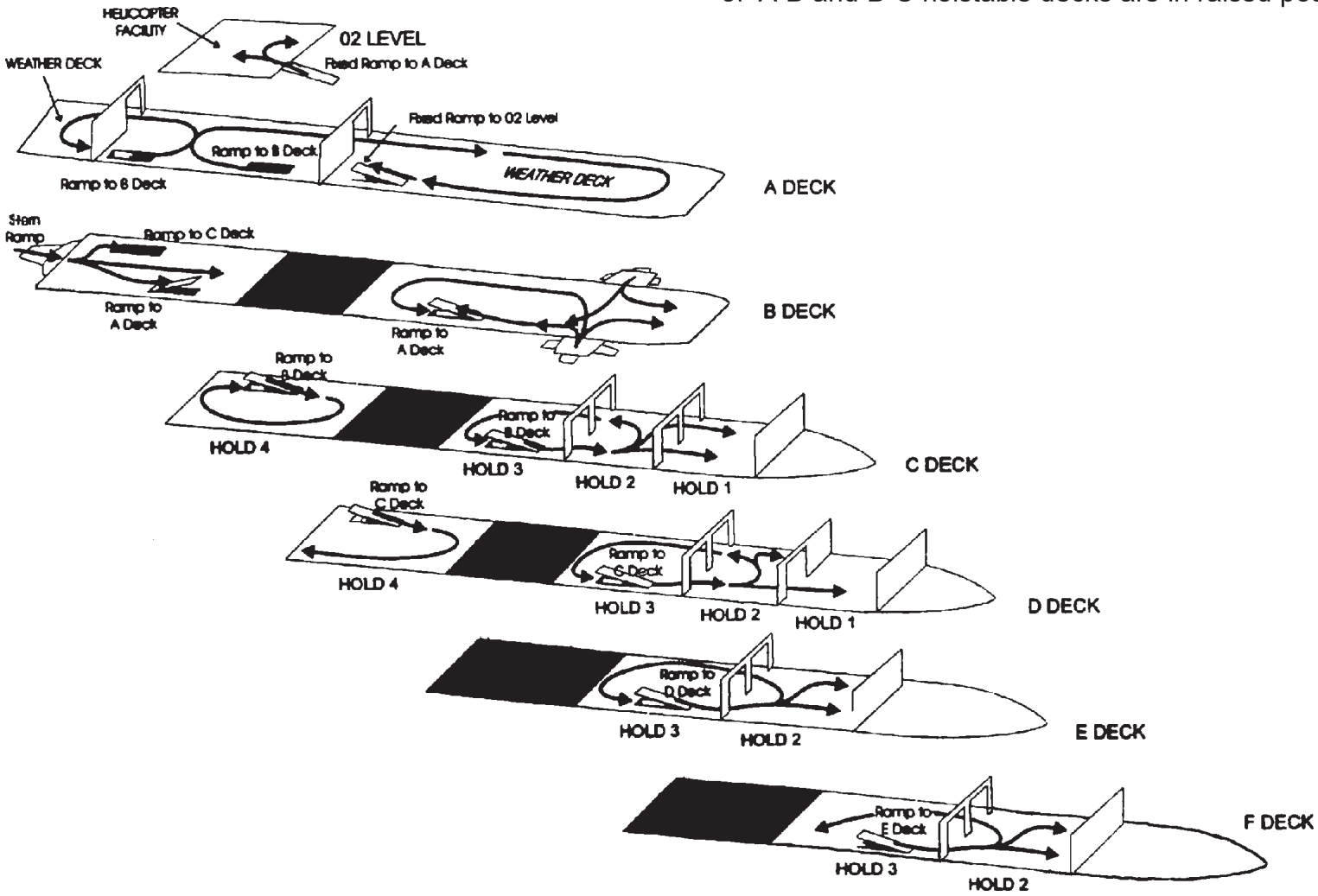

Figure 12. Typical RORO loading traffic flow (USNS Gordon).

5.3.6.2 Large Medium speed roll-on/roll-off ships (LMSR).

The DOD Mobility Requirements Study (MRS), 22 April 1991, identified a shortfall of 2 million square feet (185 806 m^2) in pre-positioned equipment and 3 million square feet (278 709 m^2) for surge sealift to carry equipment from U.S. ports to meet selected conflict/contingency requirements. As a result of this study, DOD established a program to procure 19 LMSR ships. Five of these ships were container-ships that were converted to LMSR configuration (2 converted at Newport News Shipyard and 3 converted at NASSCO Shipyard). One of the NASSCO converted ships was reconfigured and converted into a Maritime Pre-positioning Force-Enhanced (MPF-E) ship. Since this vessel went to the Marine Corps, NASSCO shipyard received a contract to build a 15th new construction ship to replace the vessel that was redesigned for the MPF-E. All of the LMSRs are under the control of the MSC (9 LMSRs (8 Army & 1 Marine) are pre-positioned and 11 are in the surge fleet).

Since the conversion and new construction LMSRs were built in different shipyards, their size and design are not the same. Ships built in the same shipyard are alike, that is, the ships converted at the NASSCO shipyard have the same design (with the exception of the reconfigured MPF-E ship) and the ships converted at the Newport News Shipbuilding and Drydock Company shipyard have the same design. The new construction ships are larger than the conversion ships. Tables 7-9 provide the specific hold, ramp, and hatch information for the USNS GORDON (a representative LMSR conversion). Figure 13 shows the USNS GORDON's inboard profile, figure 14 shows the deck arrangements, while figure 15 illustrates typical side and end ramp positions. Figure 16 illustrates a typical lashing pattern of 6-foot centers with a cloverleaf socket located in the approximate center of each 6-foot by 6-foot square.

5.3.6.3 Fast sealift ships (FSS).

The U.S. Navy owns eight fast sealift ships (T-AKR), which are normally kept in reduced operating status, but can fully activate and be underway to load ports within 96 hours. These vessels have secondary container and breakbulk capabilities. The FSS is a side-ramp loading vessel. Figure 17 shows the detailed inboard profile of the FSS vessels and tables 10 and 11 give specific hold and ramp information. Figure 18 shows the deck layout of the FSS. Figure 19 illustrates a typical lashing pattern of cloverleaf sockets spaced approximately 6-feet apart, forward to aft and port to starboard throughout deck.

5.3.6.4 Cape D class.

The Cape D class of RORO ships were designed and built as commercial vehicle transporters. Currently, these vessels are configured as wheeled and tracked RORO carriers with some container stowage capability. Table 12 provides Cape D vessel characteristics.

5.3.6.5 Cape H class.

The Cape H class RORO ships were designed as combination RORO and

Table 7. LMSR hold summary (USNS Gordon)

Deck	Hold	Hatch Opening Length by Width (ft, m)	Height in Hold (ft, m)	Allowable Deck Load (lb per ft2,kPa)	Boom Lift Capacity (LTON, lb, kg)	RORO StowageArea (ft2 , m2)
02 Level	3	58' 8" by 18' 6" 17.9 m by 5.63 m	15' 6" 4.7 m	350 16.8	113 253,120 113 000	14,502 1347
A Fwd	1 2	68' 1" by 31' 11" 20.8 m by 9.72 m 68' 1" by 31' 11" 20.8 m by 9.72 m	15' 6" 4.7 m 15' 6" 4.7 m	350 16.8 350 16.8	113 253,120 113 000	9,389 872 11,411 1060
A Enclosed	3 3 drive thru	54' 1" by 16' 1" 16.5 m by 4.9 m	15' 6" 4.7 m 10' 6" 3.2 m	550 26.3 550 26.3	113 253,120 113 000	22,703 2105 2,016 187
A Aft	4	N/A	10' 6" 3.2 m	350 16.8	N/A	8,820 819
A - B [1] Hoistable	1 2 3	54' 1" by 16' 1" 16.5 m by 4.9 m 54' 1" by 16' 1" 16.5 m by 4.9 m 54' 1" by 16' 1" 16.5 m by 4.9 m	7' 6" 2.3 m 7' 6" 2.3 m 7' 6" 2.3 m	200 9.6 200 9.6 200 9.6	N/A	6,663 619 10,836 1007 12,767 1186
B	1 2 3 4	54' 1" by 16' 1" 16.5 m by 4.9 m 54' 1" by 16' 1" 16.5 m by 4.9 m 54' 1" by 16' 1" 16.5 m by 4.9 m	13' 0" (4.0 m) and 21' 0" (6.4 m) [2] 13' 0" (4.0 m) and 21' 0" (6.4 m) [2] 13' 0" (4.0 m) and 21' 0" (6.4 m) [2] 15' 6" (4.7 m)	550, 26.3 550, 26.3 550, 26.3 550, 26.3	113 253,120 113 000	7,985 (742) and 2,291 (213) [2] 12,251 (1138) and 2,691 (250) [2] 14,998 (1393) and 1,187 (110) [2] 15,181 (1410)
B - C [1] Hoistable	2 3	54' 1" by 16' 1" 16.5 m by 4.9 m 54' 1" by 16' 1" 16.5 m by 4.9 m	7' 6" 2.3 m 7' 6" 2.3 m	200, 9.6 200, 9.6	N/A	11,030 1025 12,177 1131
C	1 2 3 4	54' 1" by 16' 1" 16.5 m by 4.9 m 54' 1" by 16' 1" 16.5 m by 4.9 m 54' 1" by 16' 1" 16.5 m by 4.9 m	15' 6" (4.7 m) 7' 6" (2.3 m) and 15' 6" (4.7 m) [2] 7' 6" (2.3 m) and 15' 6" (4.7 m) [2] 12' 0" (3.7 m)	550 26.3 550 26.3 550 26.3 550 26.3	113 253,120 113 000	6,143 571 12,564 (1167) and 1,214 (113) [2] 13,346 (1240) and 1,232 (114) [2] 13,873 1289
D	1 2 3 4	54' 1" by 16' 1" 16.5 m by 4.9 m 54' 1" by 16' 1" 16.5 m by 4.9 m 54' 1" by 16' 1" 16.5 m by 4.9 m	10' 6" 3.2 m 10' 6" 3.2 m 10' 6" 3.2 m 12' 0" 3.7 m	550 26.3 550 26.3 550 26.3 550 26.3	113 253,120 113 000	3,200 297 12,325 1145 15,076 1401 8,080 751
E	2 3	54' 1" by 16' 1" 16.5 m by 4.9 m 54' 1" by 16' 1" 16.5 m by 4.9 m	10' 6" 3.2 m 10" 6" 3.2 m	550 26.3 550 26.3	113 253,120 113 000	10,127 941 15,068 1400
F	2 3	54' 1" by 16' 1" 16.5 m by 4.9 m 54' 1" by 16' 1" 16.5 m by 4.9 m	9' 4" 2.8 m 9' 4" 2.8 m	550 26.3 550 26.3	113 253,120 113 000	5,447 506 11,136 1035

1. These decks can be raised in sections to increase the height of the deck below.
2. Under the deck hatch. For design purposes, subtract 6" from the lower listed values to ensure adequate clearance.

Table 8. LMSR fixed-ramp characteristics (USNS Gordon)

Ramp [1]	Vertical Clearance	Width (ft-in., m)	Strength (lb per ft^2, kPa)	Area (ft^2, m^2)
A/B (fwd)	15 ft 6 in., 4.7 m	18 ft. 0 in., 5.5 m	550, 26.3	2443, 227
A/B (aft)	15 ft 6 in., 4.7 m	18 ft. 0 in., 5.5 m	550, 26.3	1635, 152
B/C (fwd)	15 ft 6 in., 4.7 m.	18 ft. 0 in., 5.5 m	550, 26.3	1573, 146
B/C (aft)	12 ft 0 in., 3.7 m	18 ft. 0 in., 5.5 m	550, 26.3	408, 38
C/D (fwd)	10 ft 6 in., 3.2 m	18 ft. 0 in., 5.5 m	550, 26.3	1562, 145
C/D (aft)	12 ft 0 in., 3.7 m	18 ft. 0 in., 5.5 m	550, 26.3	1434, 133
D/E	10 ft 6 in., 3.2 m	18 ft. 0 in., 5.5 m	550, 26.3	1655, 154
E/F	9 ft 6 in., 2.9 m	16 ft. 0 in., 4.9 m	550, 26.3	1249, 116
02/A	15 ft 6 in., 4.7 m	18 ft. 0 in., 5.5 m	350, 16.8	1600, 149
B4	7 ft 6 in., 2.3 m	18 ft. 0 in., 5.5 m	550, 26.3	572, 53

1. Vehicles can be stowed on all ramps.

Table 9. Cargo hold door dimensions and locations (USNS Gordon)

Deck	Hold	Dimensions (W x H)	Location	Type
A	3	22' 1" X 10' 6" 6.7 m X 3.2 m	1 door, portside aft	Horizontal Sliding - Watertight
A	3	22' 1" X 15' 6" 6.7 m X 4.7 m	1 door, portside forward	Horizontal Sliding - Watertight
A	4	18' 1" X 16' 11" 5. 5 m X 5.2 m	1 door, mid ramp from A-B	Top-hinged - Fire
B	3	18' 1" X 16' 1" 5.5 m X 4.9 m	1 door, bottom of ramp from A-B	Vertical Sliding - Fire
B	3	18' 1" X 16' 1" 5.5 m X 4.9 m	1 door, top of ramp from A-B	Top-hinged - Fire Weathertight
C	2	22' 1" X 15' 6" 6.7 m X 4.7 m	1 door port, 1 door starboard	Horizontal Sliding - Watertight
C	3	22' 1" X 16' 8" 6.7 m X 5.1 m	1 door, portside	Horizontal Sliding - Watertight
C	3	18' 1" X 16' 0" 5.5 m X 4.9	1 door, starboard	Horizontal Sliding - Watertight
D	2	22' 1" X 10' 6" 6.7 m X 3.2 m	1 door, starboard	Horizontal Sliding - Watertight
D	3	22' 1" X 10' 6" 6.7 m X 3.2 m	1 door port, 1 door starboard	Horizontal Sliding - Watertight
D	3	18' 1" X 10' 6" 5.5 m X 3.2 m	1 door, bottom of ramp from C to D	Top-hinged - Fire
E	3	22' 1" X 10' 6" 6.7 m X 3.2 m	1 door port, 1 door starboard	Horizontal Sliding - Watertight
E	3	18' 1" X 10' 6" 5.5 m X 3.2 m	1 door, bottom of rampfrom D to E	Horizontal Sliding - Fire
F	3	18' 0" X 9' 6" 5.5 m X 2.9 m	1 door port, 1 door starboard	Horizontal Sliding - Watertight

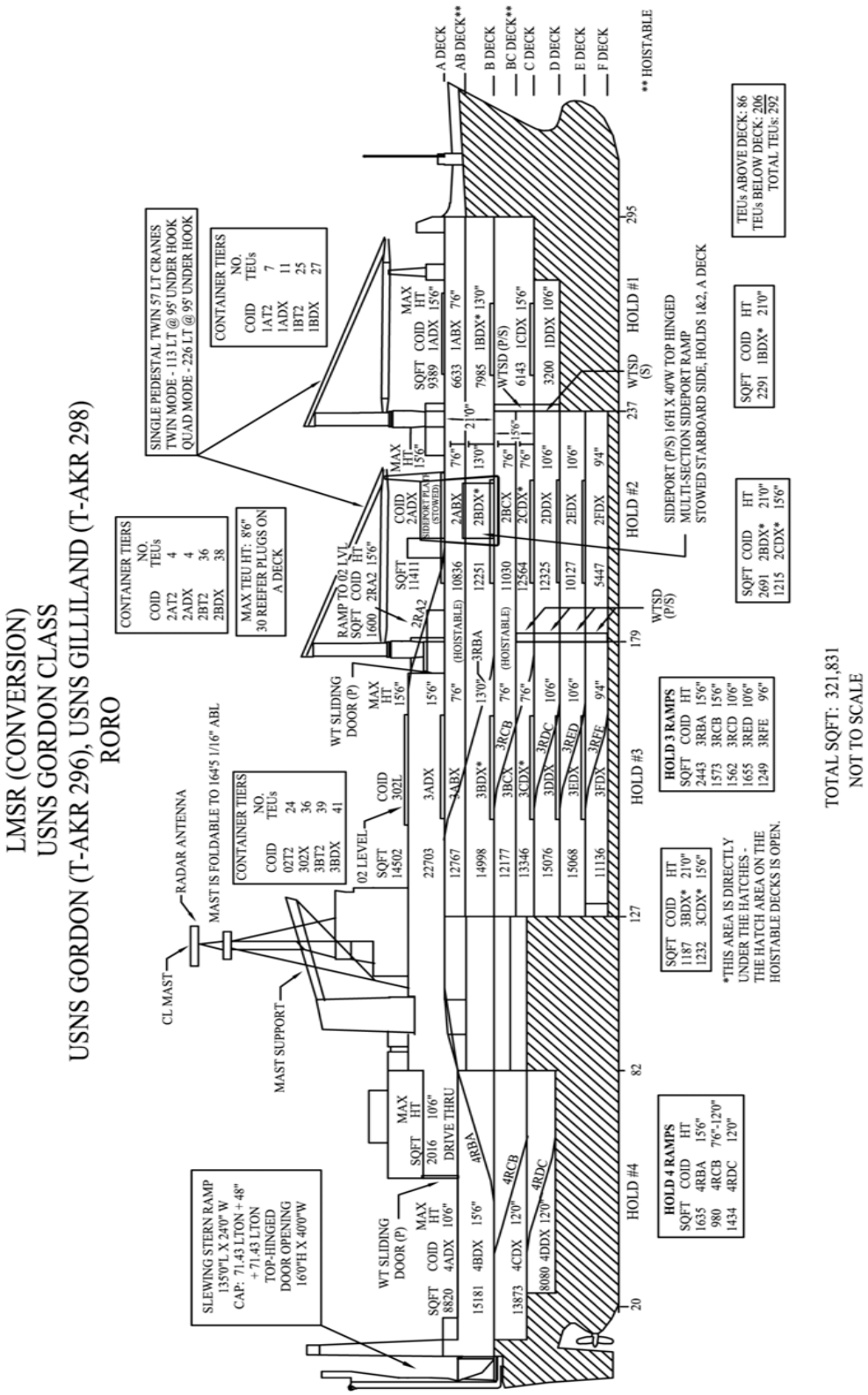

Figure 13. Typical LMSR inboard profile (USNS Gordon).

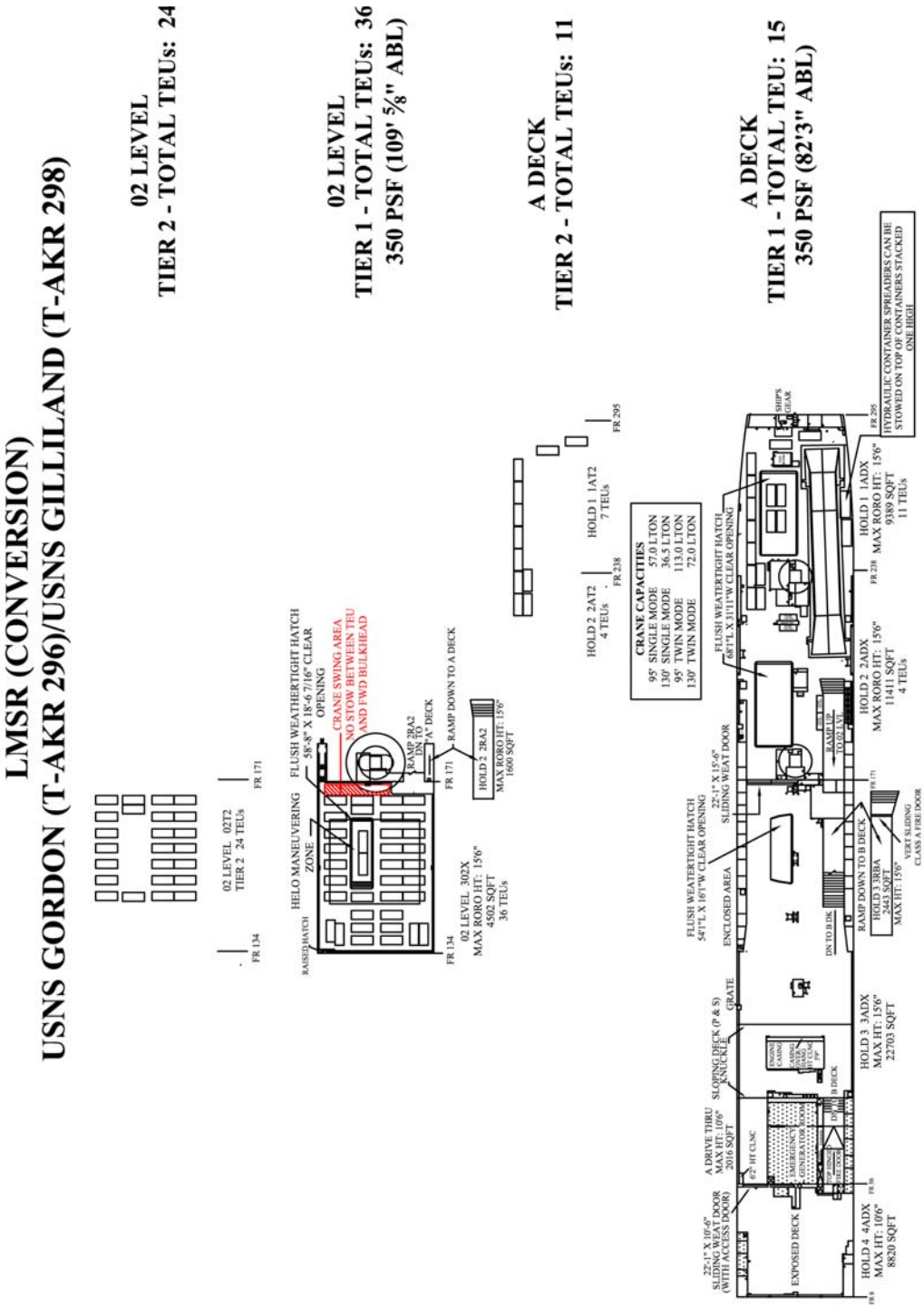

Figure 14a. USNS GORDON deck plan for the 02 Level and A Deck.

LMSR (CONVERSION)
USNS GORDON (T-AKR 296)/USNS GILLILAND (T-AKR 298)

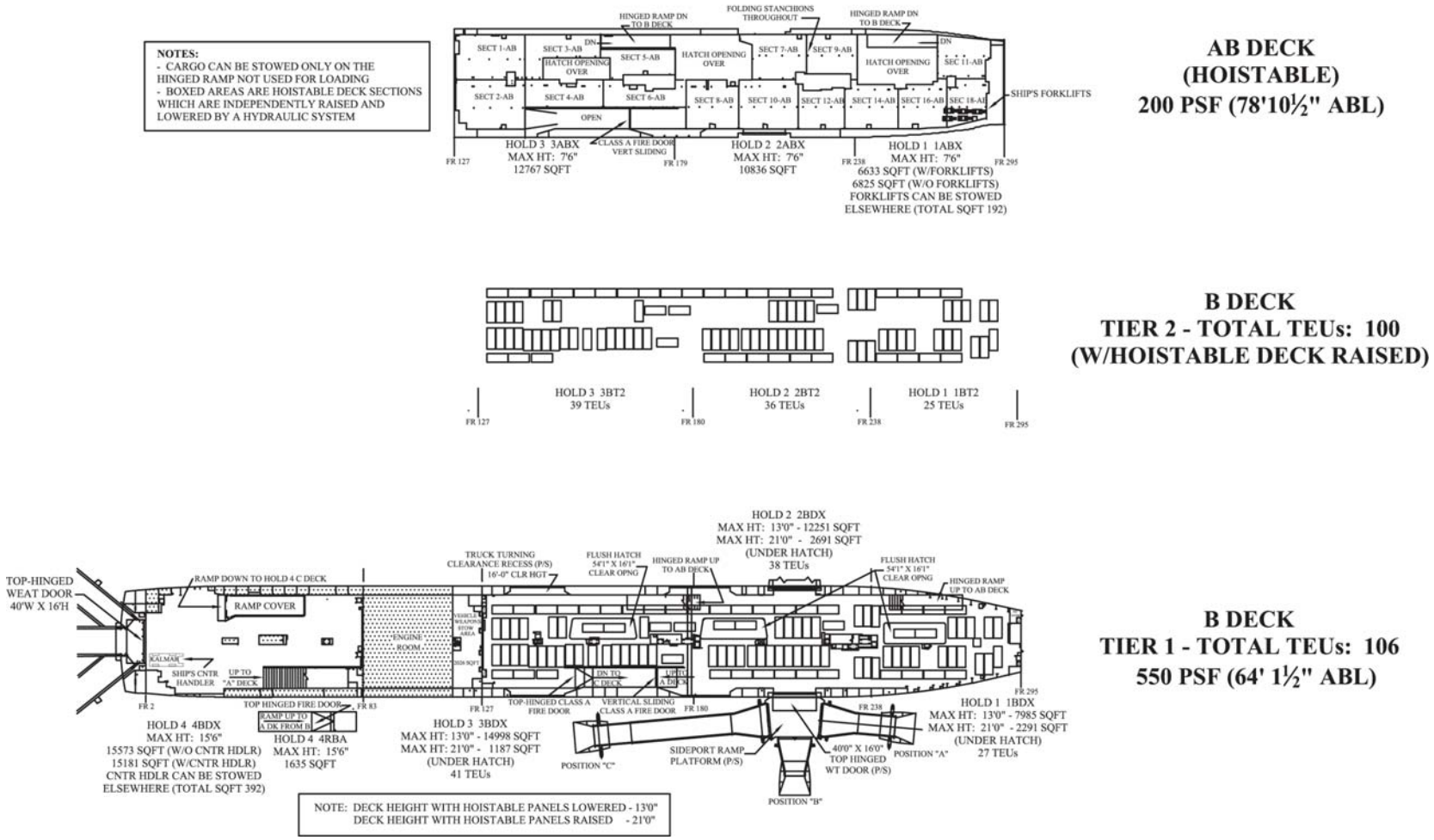

Figure 14b. USNS GORDON deck plan for the AB and A decks.

LMSR (CONVERSION)
USNS GORDON (T-AKR 296)/USNS GILLILAND (T-AKR 298)

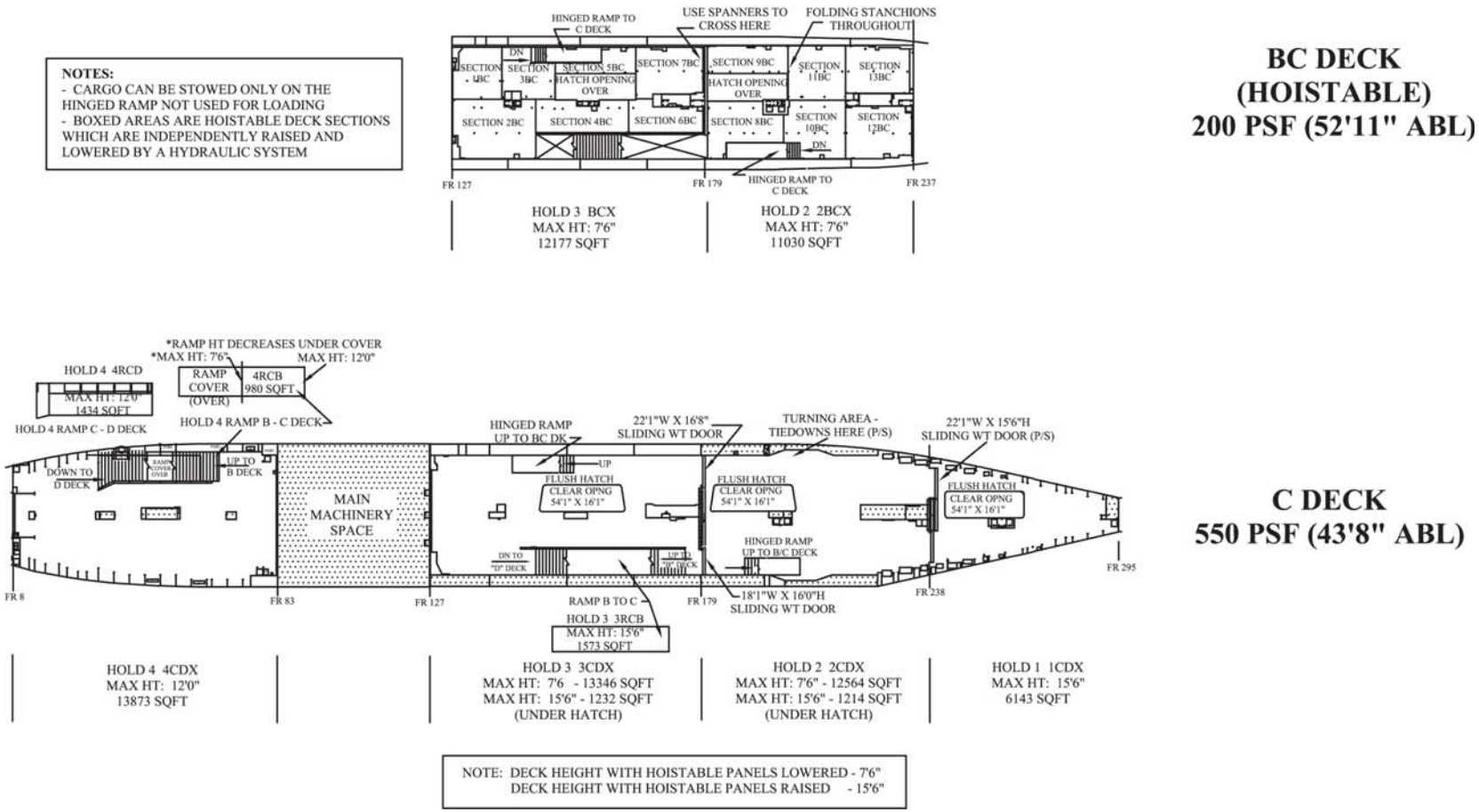

Figure 14c. USNS GORDON deck plan for the BC and C decks.

LMSR (CONVERSION)
USNS GORDON (T-AKR 296)/USNS GILLILAND (T-AKR 298)

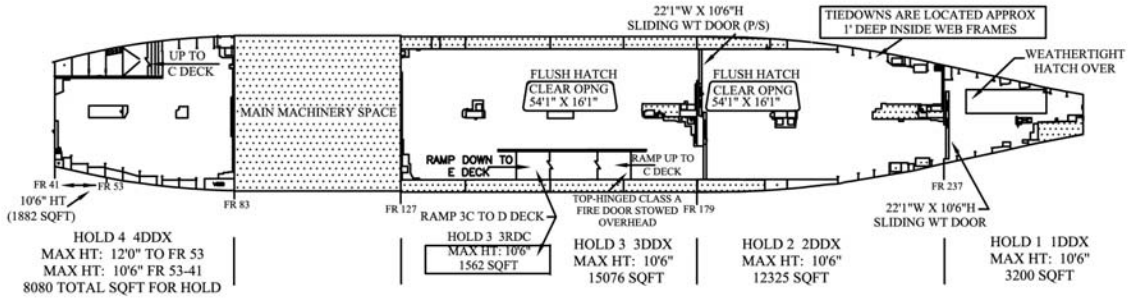

D DECK
550 PSF (30'4" ABL)

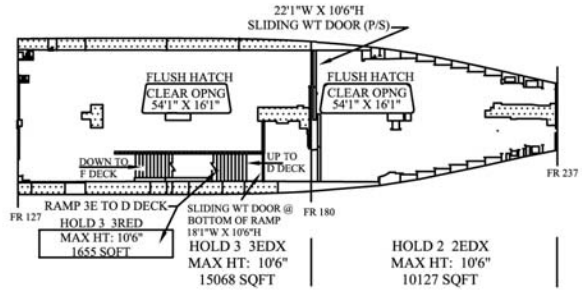

E DECK
550 PSF (17'2" ABL)

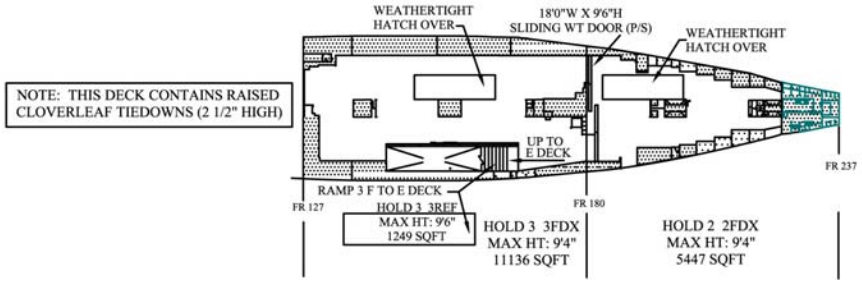

F DECK
550 PSF (5'7" ABL)

Figure 14d. USNS GORDON deck plan for the D, E, and F decks.

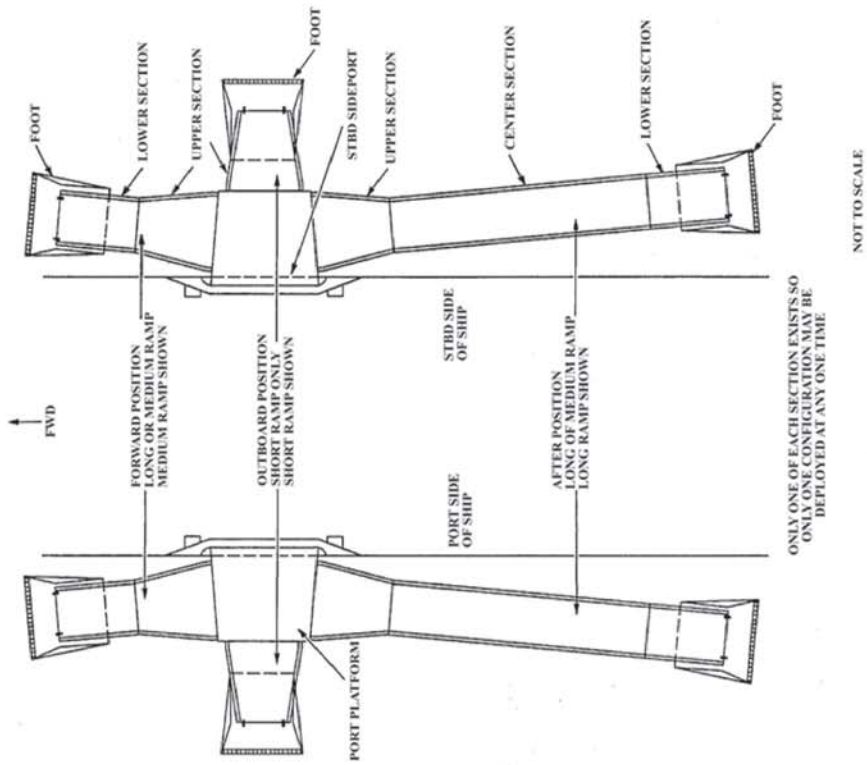

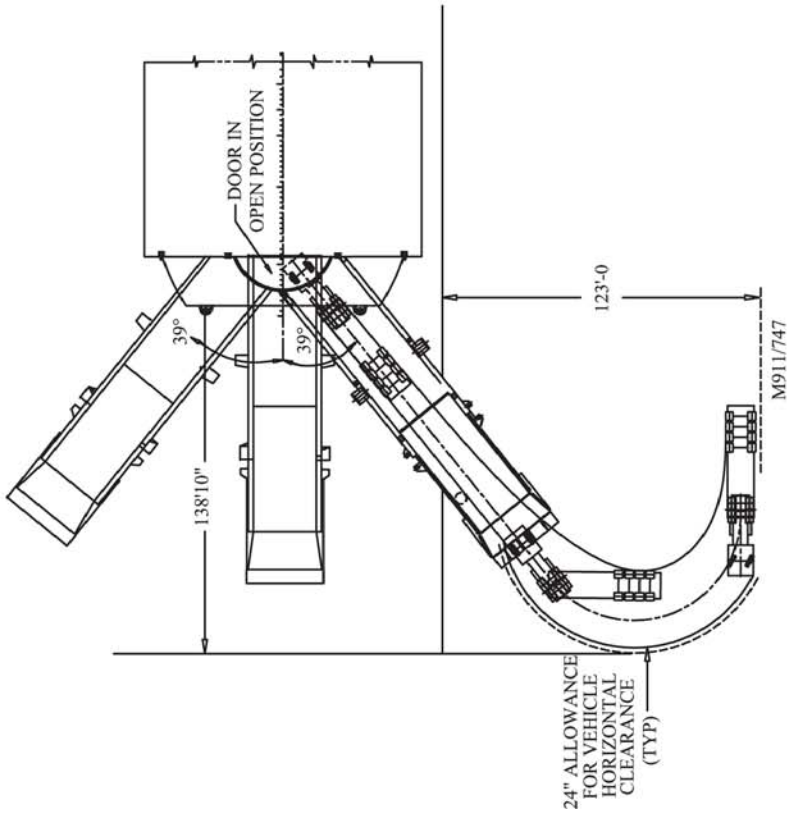

Figure 15. Typical LMSR end/side ramp positions (USNS Gordon).

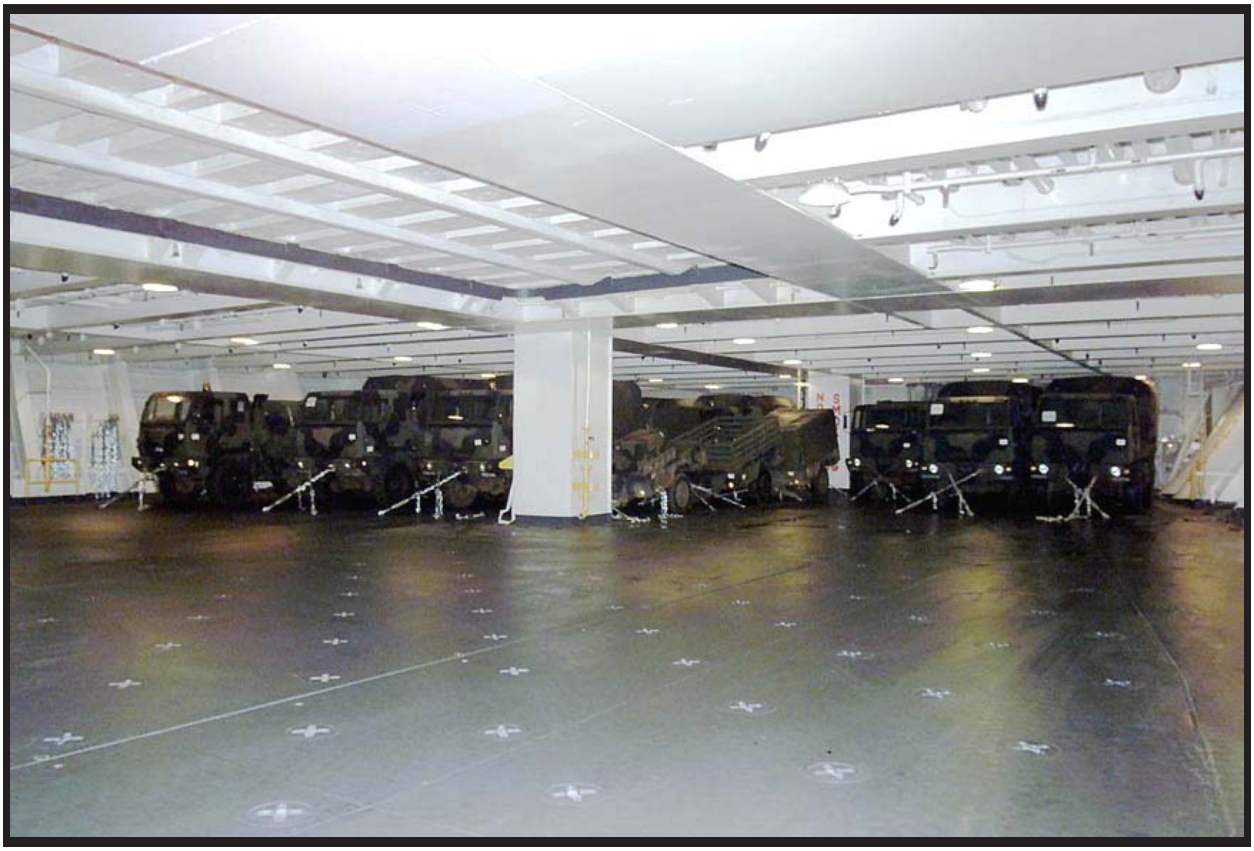

Figure 16. Typical LMSR lashing pattern.

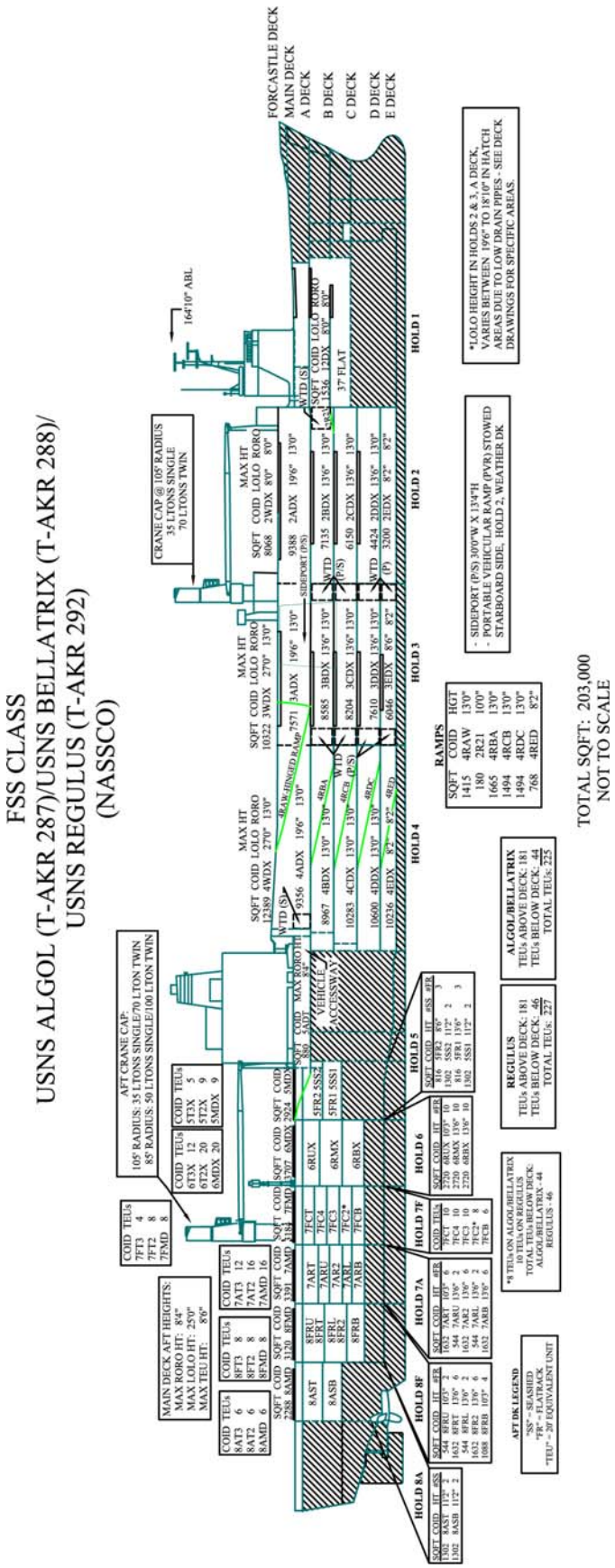

Figure 17. FSS inboard profile.

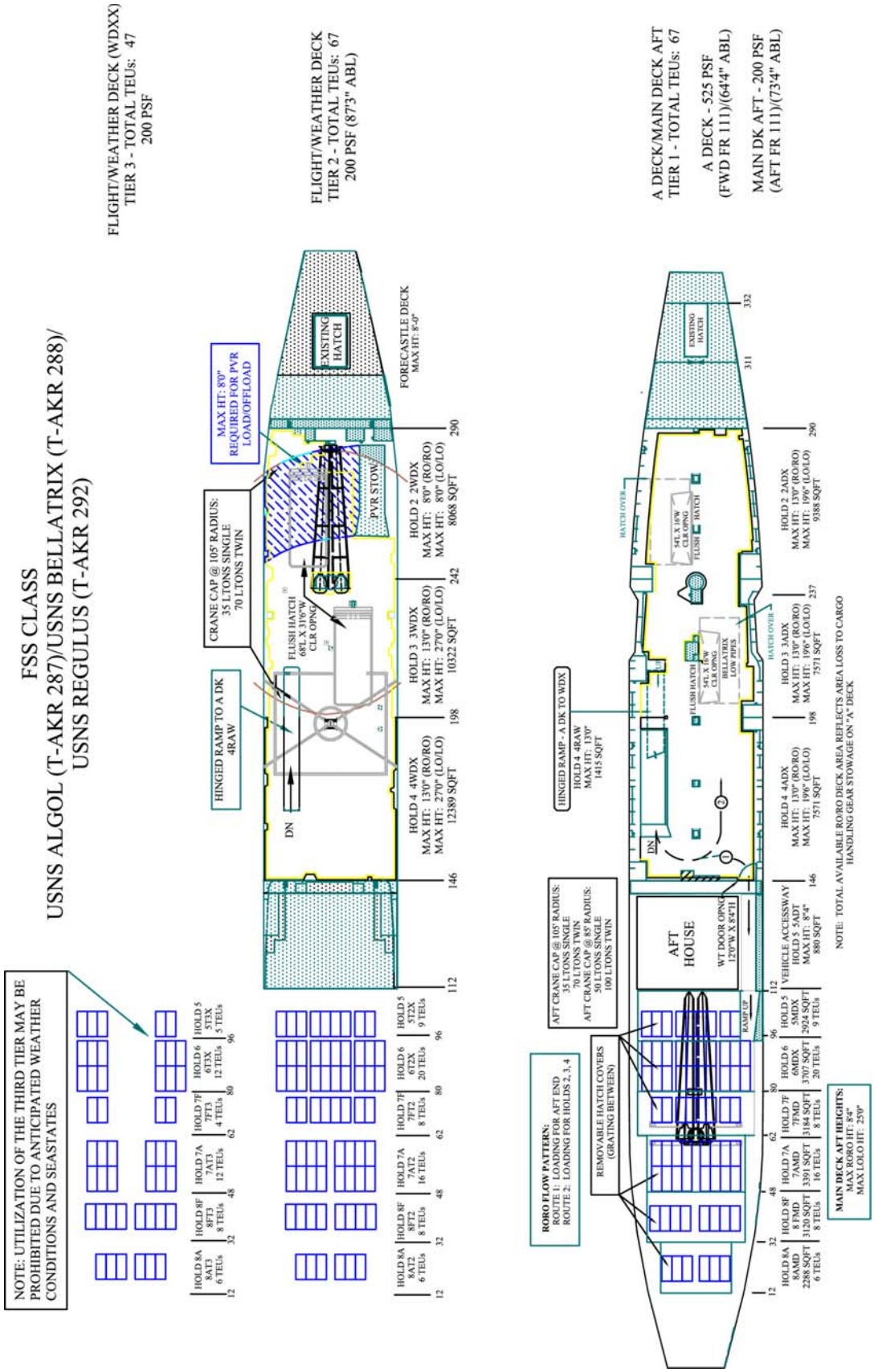

Figure 18a. FSS deck layout.

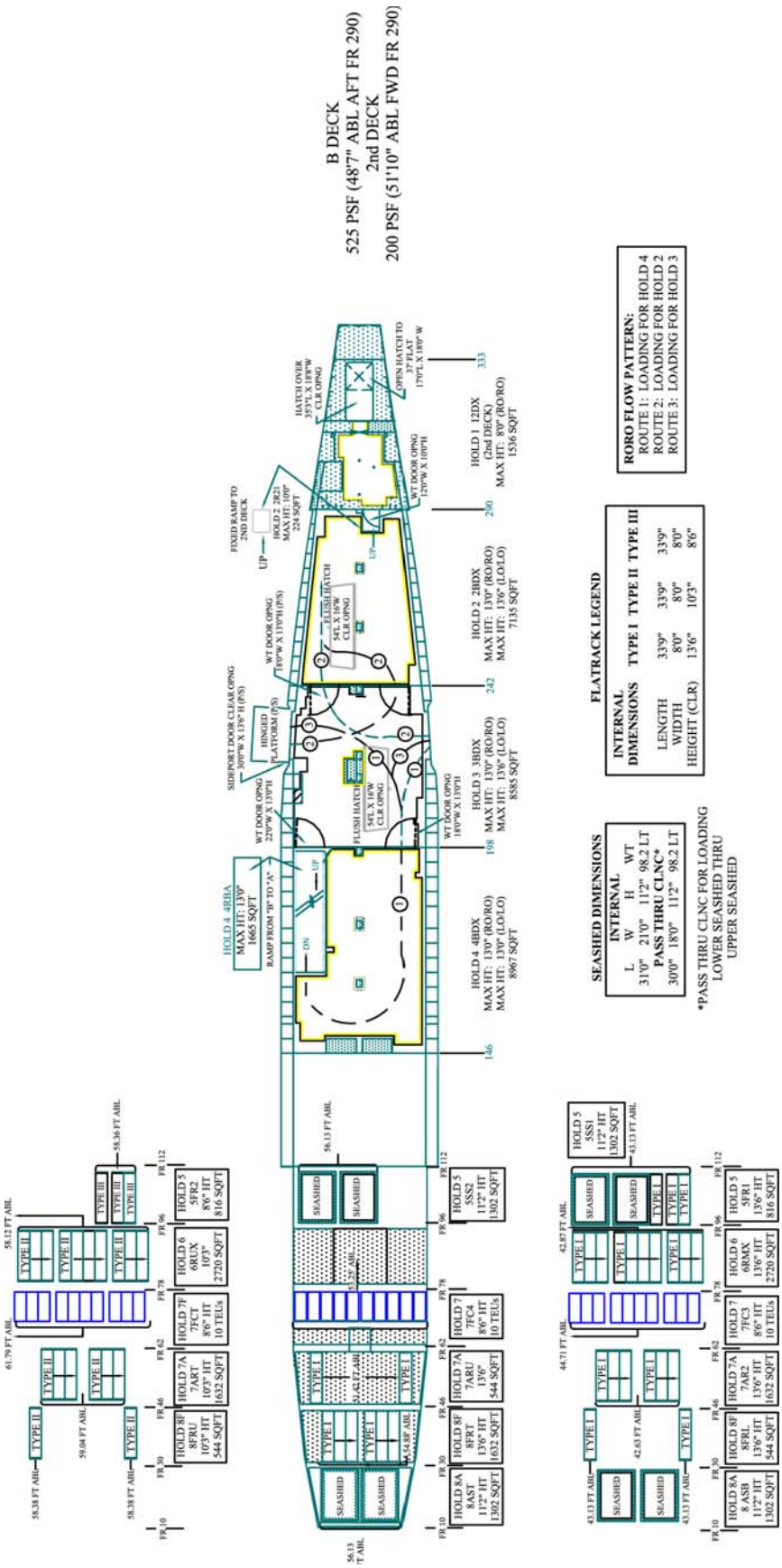

Figure 18b. FSS deck layout continued.

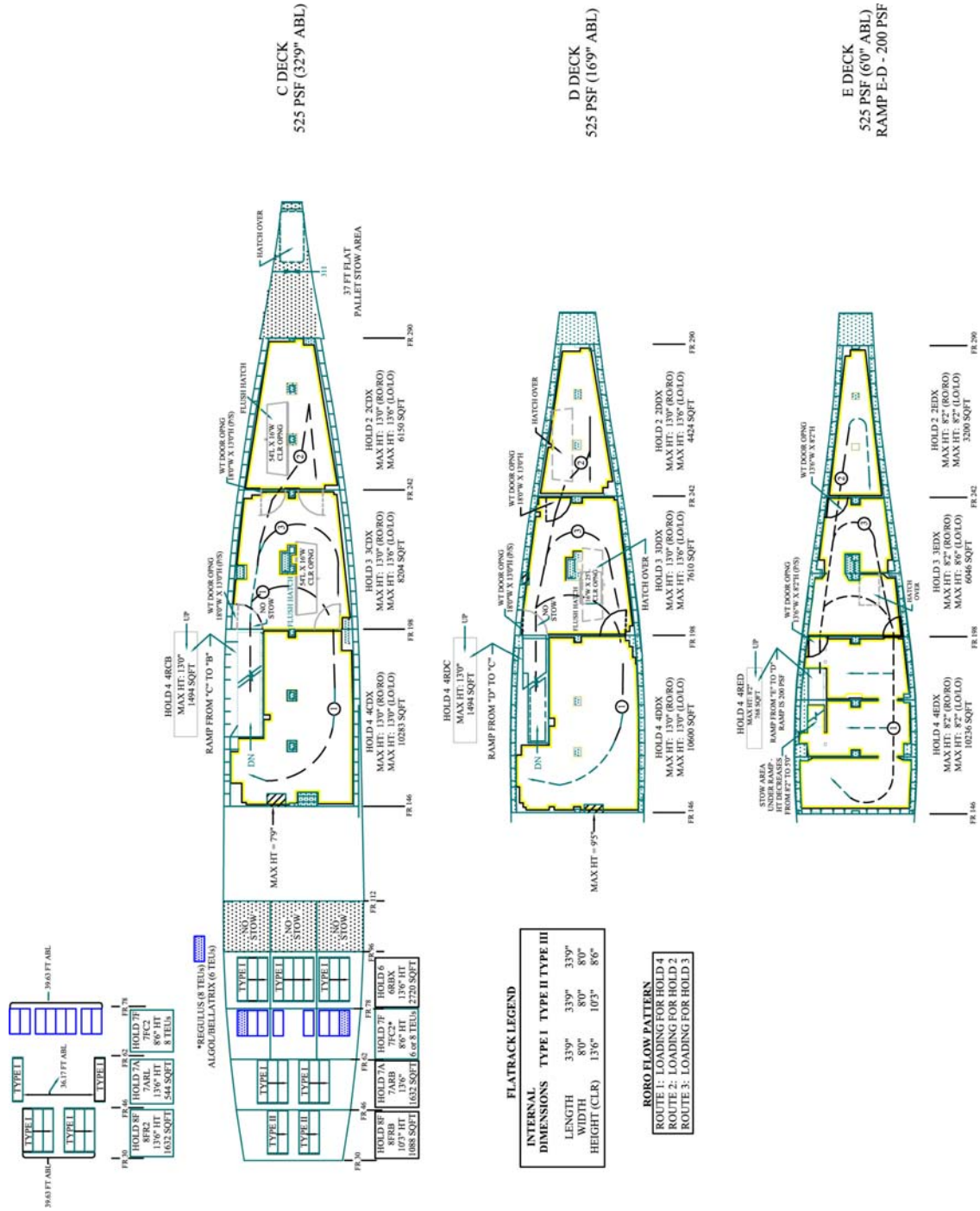

Figure 18c. FSS deck layout continued.

Table 10. FSS Hold Summary

Hold	Deck	Hatch Opening Length by Width (ft, m)	RORO Clear Height (ft, m) [2]	LOLO Clear Height (ft, m) [2]	Allowable Deck Load (lb per ft², kPa)
1	Main	38' x 21', 11.6 x 6.4	N/A	8' 0", 2.4	200, 9.58
	Second	35' 3" x 18' 8", 10.7 x 5.7	8' 0", 2.4	N/A	200, 9.58
	37 ft Flat	17' x 18', 5.2 x 5.5	N/A	12' 8", 3.9	200, 9.58
2	Weather	68' 0" x 31' 6", 20.7 x 9.6	13' 0", 4.0	N/A	200, 9.58
	A	54' x 16', 16.5 x 4.9	13' 0", 4.0	19' 6", 5.9	525, 25.14
	B	54' x 16', 16.5 x 4.9	13' 0", 4.0	13' 6", 4.1	525, 25.14
	C	54' x 16', 16.5 x 4.9	13' 0", 4.0	13' 6", 4.1	525, 25.14
	D	N/A	13' 0", 4.0	13' 6", 4.1	525, 25.14
	E	N/A	8' 2", 2.5	N/A	200, 9.58
3	Weather	68' 0" x 31' 6", 20.7 x 9.6	13' 0", 4.0	N/A	200, 9.58
	A	54' x 16', 16.5 x 4.9	13' 0", 4.0	19' 6", 5.9	525, 25.14
	B	54' x 16', 16.5 x 4.9	13' 0", 4.0	13' 6", 4.1	525, 25.14
	C	54' x 16', 16.5 x 4.9	13' 0", 4.0	13' 6", 4.1	525, 25.14
	D	54' x 16', 16.5 x 4.9	13' 0", 4.0	13' 6", 4.1	525, 25.14
	E	25' x 16', 7.6 x 4.9	8' 2", 2.5	8' 6", 2.6	525, 25.14
4	Weather	N/A	13' 0", 4.0	N/A	200, 9.58
	A	N/A	13' 0", 4.0	19' 6", 5.9	525, 25.14
	B	N/A	13' 0", 4.0	N/A	525, 25.14
	C	N/A	13' 0", 4.0	N/A	525, 25.14
	D	N/A	13' 0", 4.0	N/A	525, 25.14
	E	N/A	8' 2", 2.5	N/A	200, 9.58

1. The boom lift capacity of all holds is 70 LTON (156,800 lb, 7000 kg).
2. RORO clear heights are based on smallest constraints (height of watertight doors) on route from side port opening to hold. These values are actual dimensions. For design purposes, subtract 6" from the RORO and LOLO clear heights to ensure adequate clearance

Table 11. FSS Fixed-ramp characteristics

Leading		Width (ft, m) [1]	Height (ft, m) [1]	Ramp Strength (lb per ft², kPa)
From	To			
2nd Deck	B Deck	12' 0", 3.7	10' 0", 3.0	525, 25.14
A Deck	B Deck	18' 0", 5.5	13' 0", 4.0	525, 25.14
B Deck	C Deck	18' 0", 5.5	13' 0", 4.0	525, 25.14
C Deck	D Deck	18' 0", 5.5	13' 0", 4.0	525, 25.14
D Deck	E Deck	12' 10", 3.9	13' 0", 4.0	525, 25.14
MD (aft)	A Deck	12' 0", 3.7	8' 4", 2.5	200, 9.58

1. The width and height values given are actual dimensions. For design purposes, subtract 12" from the width values and 6" from the height values to ensure adequate clearance. Vehicles may be stowed on all ramps except the MD aft ramp (no tiedowns).

Table 12. RORO Ship characteristics

Vessel Class	No. of ships	Length (ft, m)	Beam (ft, m)	Crane Capacity (LTON, lb, kg)	Cargo Deadweight (LTON, lb, kg)	Total Deck Area (ft^2, m^2)	No. of Lower Decks [1]	Deck Height Range (ft, m) [2]	External Ramp Access Door (width by height) (ft, m) [3]	Ramp Capacity (LTON, lb, kg)
FSS	8	946 288	106 32	70 156,800 71 124	14,210 31,830,400 14 438 269	199,362 to 206,963 18 521 to 19 228	5	8' 0" to 19' 6" 2.4 to 5.9	30' 0" by 13' 1" 9.1 by 3.99	72.0 161,280 73 155 [4]
LMSR (new)	15	950' 290	106 32	113 253,120 114 813	19,039 42,647,360 19 344 576	387,662 to 392,584 36 015 to 36 472	6	7' 6" to 21' 0" 2.3 to 6.4	40' 0" by 16' 0" 12.2 by 4.9	125.0 280,000 125 000
LMSR (conversion)	4	907 to 956 276 to 291	106 32	113 253,120 114 813	15,205 34,059,200 15 449 040	302,087 to 321,831 28 065 to 29 899	6/7	5' 5" to 17' 9" 1.6 to 5.4	23' 0" by 17' 0" 7.0 by 5.2	125.0 280,000 125 000
Cape D	5	680 207	97 30	N/A	18,450 43,292,480 18 746 123	167,359 15 548	4	5' 5" to 17' 10" 1.6 to 5.4	23' 0" by 17" 0" 7.0 by 5.2	65.0 145,600 65 000
Cape E	1	653 199	94 29	36 80,640 36 000	19,327 42,608,710 19 637 198	161,372 14 992	4	9' 6" to 19' 0" 2.9 to 5.8	34' 4" by 18' 3" 10.5 by 5.6	128.0 286,661 130,000
Cape H	3	750 229	106 32	39 87,360 39 000	28,278 63,342,720 28 731 862	214,365 19 915	4	5' 9" to 20' 7" 1.8 to 6.3	39' 4" by 20' 8" 10.5 by 6.3	225 504,000 228 611
Cape I	4	685 209	102 31	30 67,200 30 000	13,244 29,666,560 13 456 466	149,088 13,851	4	9' 11" to 17' 11" 3.0 to 5.5	40' 0" by 16' 0" 12.2 by 4.9	100.0 224,000 100 000
Cape K	2	696 212	106 32	N/A	21,599 48,381,760 21 945 665	146,895 13 647	3	10' 1" to 21' 11" 3.1 to 6.7	82' 0" by 22' 11" 25.0 by 7.0	200.0 448,000 200 000
Cape L	2	682 208	75 23	N/A	13,521 30,287,040 13 738 012	75,644 7028	3	13' 8" to 17' 5" 4.2 to 5.3	12' 8" by 14' 2" 3.9 by 4.3	30.0 67,200 30 000
Cape O	1	635 194	92 28	25 56,000 25,401	15,896 35,607,040 16 151 130	118,780 11,035	4	9' 10" to 20' 8" 2.0 to 6.3	24' 10" by 22' 3' 7.6 by 6.8	91.6 205,184 93 070
Cape R	3	648 198	106 32	N/A	15,808 35,409,920 16,061,718	176,313 16 380	4	11' 2" to 22' 7" 3.4 to 6.9	41' 0" by 23' 6" 12.5 by 7.2 (stern) 21' 0" by 20' 4" 6.4 by 6.2 (side)	200.0 448,000 203 209 (stern) 60.0 134,400 60 000 (side)
Cape T	3	634 193	89 27	N/A	10,309 23,092,160 10,272,459	116,004 to 117,854 10 777 to 10 949	3	10' 4" to 13' 3" 3.1 to 4.0	36' 8" by 26' 7" 11.2 by 8.2 (stern)	157.0 351,680 159 519 (stern)
Cape V	2	632 193	87 27	N/A	16,421 36,783,040 16 684 557	133,409 12 394	3	20' 2" to 13' 6" 6.1 to 4.1	23' 8" by 20' 2" 7.2 by 6.1	292.0 654,080 296 687
Cape W	2	697 212	106 32	N/A	22,473 50,339,520 22 832 568	295,958 27 495	7	8' 4" to 14' 6" 2.5 to 4.4	26' 3" by 19' 6" 8.0 by 5.9	186.0 416,640 188 985

Table 12. RORO Ship characteristics continued

Vessel Class	No. of ships	Length (ft, m)	Beam (ft, m)	Crane Capacity (LTON, lb, kg)	Cargo Deadweight (LTON, lb, kg)	Total Deck Area (ft^2, m^2)	No. of Lower Decks [1]	Deck Height Range (ft, m) [2]	External Ramp Access Door (width by height, ft, m) [3]	Ramp Capacity (LTON, lb, kg)
Comet	1	499 152	78 24	60 134,400 60 963	7,486 16,768,640 7 606 150	88,357 8209	4	6' 11" to 17' 0" 2.1 to 5.2	19' 0" by 12' 0" 5.8 by 3.7 (stern) 15' 0" by 12' 0" 4.6 by 3.7 (side)	60.0 134,400 60 000
Meteor	1	540 165	83 25	70 156,800 71 124	9,460 21,190,400 9 611 833	103,440 9610	4	8' 6" to 14' 0" 2.6 to 4.3	18' 0" by 13' 0" 5.5 by 3.4 (stern) 15' 0" by 13' 0" 4.6 by 4.4 (side)	56.0 125,440 56 000 (stern) 54 120,960 54 000 (side)
Adm. William M. Callaghan	1	694 12	92 28	120 268,800 121 926	9,225 20,664,000 9 373 061	153,825 14 291	4	7' 11" to 14' 8" 2.4 to 4.5	17' 0" by 18' 0" 5.2 by 5.5 (stern) 15' 0" by 13' 0" 4.6 by 4.0 (side)	55.8 124,992 55 800 (stern and side)
MPS Amsea	5	673 205	106 32	117 262,080 118 878	19,278 43,182,720 19 587 411	184,511 17 142	7	6' 6" to 15' 0" 2.0 to 4.6	43' 0" by 15' 1" 13.1 by 4.6	66.0 147,840 66 000
MPS Maersk	5	755 230	90 27	120 268,600 121 926	14,488 32,453,120 14 720 532	140,697 13 071	4	7' 8" to 29' 6" 2.3 to 9.0	21' 3" by 15' 4" 6.5 by 4.8 (stern) 28' 0" by 11' 0" 8.5 by 3.4 (side)	66.0 147,840 66 000 (stern and side)
MPS Waterman	3	821 250	106 32	98.4 220,416 99 979	19,069 42,714,560 19 375 057	149,874 13 924	5	6' 6" to 18' 0" 2.0 to 5.5	44' 0" by 18' 1" 13.4 by 5.5	200.0 448,000 203 210

1. The number of lower decks includes any car or retractable decks.
2. The values given are actual dimensions. For design purposes, subtract 6" from the maximum deck height to ensure adequate clearance.
3. The values given are actual dimensions. For design purposes, subtract 12" from the width values and 6" from the heights values to ensure adequate clearance.
4. The number give is for pierside operations. The ramp capacity for instream operations is 54.9 LTON/122,976 lb/55 781 kg at sea state 3.

Figure 19. Typical FSS lashing pattern.

container carriers for operations in undeveloped ports. Lift-on operations are accomplished with a 39-LTON single pedestal, single boom crane. Table 12 provides Cape H vessel characteristics.

5.3.6.6 Miscellaneous RORO vessels.
Other RORO vessels in the current RRF are shown in table 12.

5.3.7 Support Vessels.
To support cargo operations at undeveloped ports, the military is establishing a fleet of support vessels. The auxiliary crane ships' (T-ACS) primary function is to load or discharge non-self-sustaining cargo. Tables 13-15 provide transport characteristics for the T-ACS.

5.3.8 Logistics-over-the-shore (LOTS) operations and inland waterways.

5.3.8.1 General.
Once in the theater of operations, Army, Navy, and Marine Corps watercraft are used for port, inland waterway, LOTS, and intratheater movement operations. These watercraft support operations in and around seaports when port facilities are

Table 13. Auxiliary ship characteristics

MARAD Design	No. of ships	Ship Name	Length (ft, m)	Beam (ft, m)	Max Draft (ft, m)	Cargo Deadweight (LTON, lb, kg)	Tandem Max Boom Capacity [1] (LTON, lb, kg)
C6-S-1qd	3	Keystone State (T-ACS 1) Gem State (T-ACS 2) Grand Canyon State (T-ACS 3)	669' 203.9	76' 23.2	33' 3" 10.1	9,779 21,904,960 9,779,000	105 335,200 105 000
C5-S-MA73c	3	Gopher State (T-ACS 4) Flickertail State (T-ACS 5) Cornhusker State (T-ACS 6)	610' 185.9	78' 23.8	31' 7" 9.6	8,400 18,816,000 8,400,000	120 268,800 120 000
C6-S-MA1xb	2	Diamond State (T-ACS 7) Equality State (T-ACS-8)	668' 204	76' 23.2	33' 4" 10.2	11,700 26,208,000 11 700 000	120 268,800 120 000
C6-S-MA60d	2	Green Mountain State (T-ACS 9) Beaver State (T-ACS 10)	665' 203	75' 22.9	32' 9.8	6,500 14,560,000 6 500 000	120 268,800 120 000

1. See Table 13 for T-ACS hatch data. See Table 14 for additional T-ACS crane capabilities.

Table 14. Auxiliary ship hatch data

Hold	Deck	Hatch Dimensions (ft, m) [1]	
		Center	Port and Starboard
1	Foc'sle	21' 0" by 19' 4" 6.4 by 5.9	
2	Main		43' 3" by 26' 10" (P) 43' 3" by 18' 2" (S) 13.2 by 8.2 (P) 13.2 by 5.5 (S)
3	Main		43' 3" by 26' 10" (P&S) 13.2 by 8.2
4, 4A, 4B	Main	43' 3" by 26' 10" 13.18 by 8.2	43' 3" by 18'2" (P&S) 13.2 by 5.5
5	Main	41' 11" by 26' 10" 12.7 by 8.2	
6	Main	43' 3" by 26' 10" 13.18 by 8.2	
7	Main	25' 10" by 26' 10" 7.9 by 8.2	

1. The values given are actual dimensions. For design purposes, substract 12" (.3m) from the length and width values to ensure adequate clearance.

Table 15. T-ACS Ship Crane Capabilities

Ship	Single Hoist [1] (below hook) (LTON, ft/lb, ft/kg, m)	Twin Hoist [1] (below equalizing beam) (LTON, ft/lb, ft/kg, m)	Tandem Hoist (LTON, ft/lb, ft/kg, m)
T-ACS 1/2/3	30 LTON @ 121' 67,200 @ 121' 30 000 @ 36.9	30 LTON @ 96' 134,400 @ 96' 60 000 @ 29.3	105 LTON @ 65' 235,200 @ 65' 105 000 @19.8 port
T-ACS 4/5/6/7/8/9/10	30 LTON @ 121' 76,200 @121' 30 000 @ 36.9	60 LTON @ 121' 134,400 @ 121' 60 000@ 36.9	120 LTON @ 65' 268,800 @ 65' 120 000 @ 19.8 port
1. Turntable parallel to centerline.			

nonexistent, degraded, or denied. Strategic sealift ships may be required to discharge in the stream, employing complex and often time-consuming operations to move cargo and personnel across bare beaches. There is a broad spectrum of operations required to open and reconstitute degraded ports, operate in small, undeveloped ports or fishing villages, or gain access through inland waterways. The term LOTS encompasses the capabilites required to operate across this spectrum of operations, to include the discharge of cargo through major or secondary ports inaccessible or denied to deep draft shipping, small ports, villages, inland waterways, and bare beaches when necessary. Transferring cargo from ship to shore is accomplished by military lighterage. The lighterage used to offload cargo vessels positioned offshore consists of amphibian and landing craft (conventional) vessels. The lighterage must be compatible with the vessels they service and the cargo needing transportation. Table 16 lists the lighterage as they are best paired to particular cargo vessels. Vehicle design approach/departure angles must prevent contact at the ramp crest/toe for a 15° ramp angle.

5.3.8.2 Landing craft.

Landing craft are conventional watercraft designed to transport cargo from ship-to-shore. Landing craft consist of three basic classes: landing craft, mechanized (LCM); landing craft utility (LCU), and logistic support vessel (LSV). The LCM transports cargo, troops, and vehicles from ship to shore or in retrograde movements. It is also utilized in lighterage and utility work in harbors. The LCU provides worldwide transport of combat vehicles and sustainment cargo. It provides intratheater movement of cargo and equipment and, during LOTS operations, it can carry cargo from deep-draft ships to shore ports or areas too shallow for larger ships. The LSV provides worldwide transport of combat vehicles and sustainment cargo. It provides intratheater line haul of large quantities of cargo and equipment. The LSV can transport cargo from ship-to-shore in

Table 16. LOTS Lighterage Compatibility

Ship Type	Lighterage
Breakbulk	Causeway Ferry, LSV, LCU, LCM, LCAC, LARC
Container	Causeway Ferry, LSV, LCU, LCM, LCAC, LARC
RORO	Causeway Ferry, LSV, LCU, LCM
LASH/SEEBEE	Towboat, Tug, Pusher Craft for Barge Towing and Handling

LOTS operations, including those in remote areas with unimproved beaches. Table 17 provides transport weights and dimensional constraints for the landing craft. Figures 20 to 22 show plan views of the LCM-8, the LCU-2000, and the LSV.

5.3.8.3 Amphibian.

The lighter amphibious resupply cargo-60 tons (LARC-LX) is used to transport tracked and wheeled vehicles, including beach preparation equipment and sustainment cargo from ship-to-shore or inland transfer points. The LARC-LX is a 1950's design using antiquated technology. It can be transported on a semi-submersible vessel, in the well deck of an LSD, or aboard a SEABEE. It is the only amphibian in the Army inventory, and the only vessel capable of landing on a beach through a breaking surf. The LARC-LX can be deck-loaded on a commercial vessel or heavy lift ship for transport overseas. It will be used with the Navy's newest Off-Shore Petroleum System to deliver the beach termination unit and beach tractor to the beach. It will also be fitted with a large winch to haul conduit ashore. Figure 23 shows a plan view of the LARC-LX.

5.3.8.4 Air-cushioned.

The current air cushioned amphibious craft is the U.S. Navy's lighter air cushioned air cargo (LCAC). The LCAC is a high-speed, over-the-beach fully amphibious landing craft capable of carrying a 60-75 ton payload. It can operate from existing and planned well deck ships and transport weapons systems, equipment, cargo, and personnel from ship to shore and across the beach. The transport weight and dimensional constraints for this craft are given in table 18.

Table 17. USA, USMC, and USN lighterage

Class	Cargo Deck				Cargo Capacity (short tons, lb, kg)	Ramp width (ft, m) [1]	Ramp capacity (short tons, lb, kg)
	Length (ft, m)	Width (ft, m)	Height (ft, m)	Area (sqft, sqm)			
Army							
LARC-LX	37' 0" 11.3	13' 8" 4.2	N/A	503 47	60.0 120,000 54 431	13' 8" 4.2	N/A
LCM-8	42' 9" 13.0	14' 6" 4.4	N/A	620 58	58.4 116,800 52 980	14' 6' (Bow) 4.4 (Bow)	65 130,000 58 967
LCM-8 Mod 2	18' 6" 5.6	14' 6" 4.4	N/A	269 25	TBD	14' 6' (Bow) 4.4 (Bow)	65 130,000 58 967
LCU 1600 [3]	105' 0" 32	17' 0" [3] 5.2	N/A	1785 166	179.2 358,400 162 570	15' 1" (Bow) 4.6 (Bow)	97.5 195,000 88 452
LCU-2000	100' 0" 30.5	38' 0" 11.6	30' 0" (Bow) 9.1 (Bow)	2500 232.3	392 784,000 355,622	16' 0" (Bow) 4.9 (Bow)	224 448,000 203 200
LSV	256' 0" 78.0	60' 0" 18.3	17' 0" (Aft) 5.2 (Aft)	10500 976	2000 4,000,000 1,814,400	19' 0" (Bow) [2] 5.8 (Bow) [2] 16' 0" (Stern) 4.9 (Stern)	58.24 116,480 52 835
HSV-X1	185' 0" 56.4	78' 0" 23.8	14' 6" 4.4	12114 1125	815 [4] 1,630,000 739 368	14' 4" (Stern) 4.4 (Stern)	35 70,000 31 752
HSV-X2	207" 0" 63.1	78' 0" 23.8	15' 4" 4.7	14000 1300	691 [4] 1,382,000 626 865	15' 5" (Stern) 4.7 (Stern)	75 150,000 68 039
TSV-1X	207' 0" 63	78' 0" 23.8	14' 8" 4.5	14000 1300	820 [4] 1,640,000 743 904	15' 0" (Stern) 4.6 (Stern)	72 144,000 65 318
Marine Corps							
LCU	121' 0" 36.9	25' 0" [5] 7.6	N/A	1850 171.9	143 286,000 129 730	14' 3" (Bow) 4.4 (Bow) 18' 0" (Stern) 5.5 (Stern)	112 (Bow) 224,000 (Bow) 101 606 (Bow) 97.5 (Stern) 194,000 87 998
LCM Mark 8 (steel)	42' 0" 12.8	14' 0" 4.3	N/A	588 54.6	60 120,000 54 432	14' 9" (Bow) 4.5 (Bow)	65 130,000 58 968
LCM Mark 8 (aluminum)	42' 0" 12.8	17' 0" 5.2	N/A	714 66.3	60 120,000 54 432	14' 9" (Bow) 4.5 (Bow)	65 130,000 58 968
WestPac Express	279' 0" 85	78' 0" 23.8	14' 3" 4.3	30,912 2,872	789.27 [4] 1,578,540 716 026	16' 0" (Stern) 4.9 (Stern)	36.4 72,800 33 022
Navy							
LCAC [4]	78' 0" 23.8	27' 0" 8.2	N/A	1,969 183	60 120,000 54,431	28' 4" (Bow) 8.6 (Bow) 14' 10" (Stern) 4.5 (Stern)	75.0 150,000 68 040

1. Values given are actual dimensions. For design purposes, subtract 12" (0.3m) from the width for ramps and 6" (0.15m) from the height limitations to ensure adequate clearance.
2. For wheeled and tracked items, the width of the ramp itself is 19' (5.8m). Therefore, the maximum width, width from outside-of-tire to outside-of-tire or outside-of-track to outside-of-track is 19' (5.8m) minus 1' (.3m) to ensure adequate clearance on the LSV bow ramp.
3. The LCU 1600 Class reached the end of its economic useful life in 1996, but a few remain in U.S. army Reserve units. The LCU 1646 was replaced by the LCU 2000. The cargo deck width of the LCU 1600 Class varies from 17' 0" to 28' 0" throughout the vessel. For design purposes, use 17' 0" as the worst-case value.
4. This is the total deadweight of these vessels. Minimum fuel must be carried on board for the vessel to perform at maximum payload capacity.
5. The cargo deck contact area pressure limit is 80 psi (552 kPa). Areas used for loading or unloading cargo, such as ramps, are restricted to wheel or track loads equal to a vertical load factor of 1.5g of the vehicle weight. The cargo capacity listed for the LCAC is at its overload weight (maximum cargo capacity). The normal capacity load is 60 tons (120,000 lbs, 54 431 kg).
6. WestPac Express has two decks. Dimensional data is for the main deck with mezzanine deck raised. Area includes the main deck (20,074 sqft) and upper or mezzanine deck (10,838 sqft). Overhead clearance for main deck with mezzanine lowered is 8'10" and the height of the mezzanine deck is 7'4". Payload is 425 STON with full fuel and no troops/306 STON with full fuel and 970 troops.

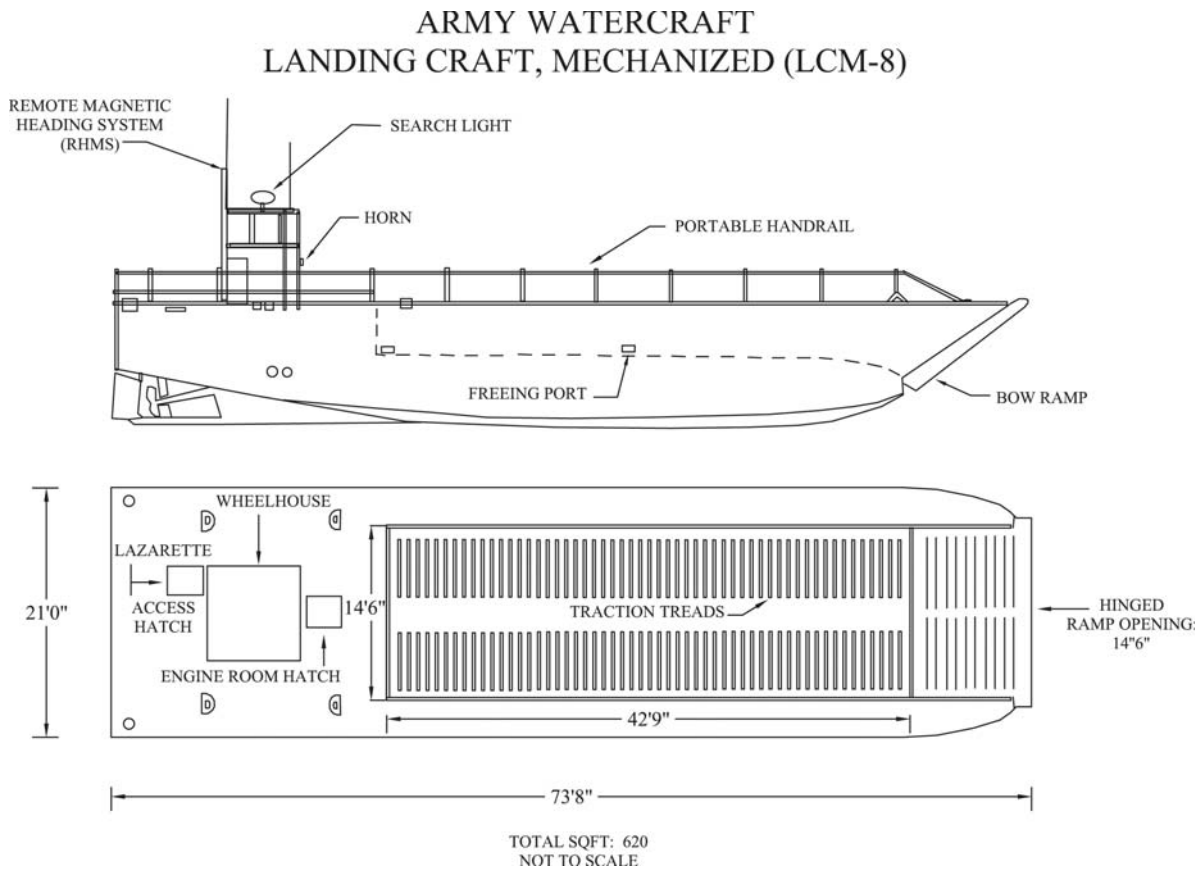

Figure 20. Landing Craft, Mechanized (LCM-8).

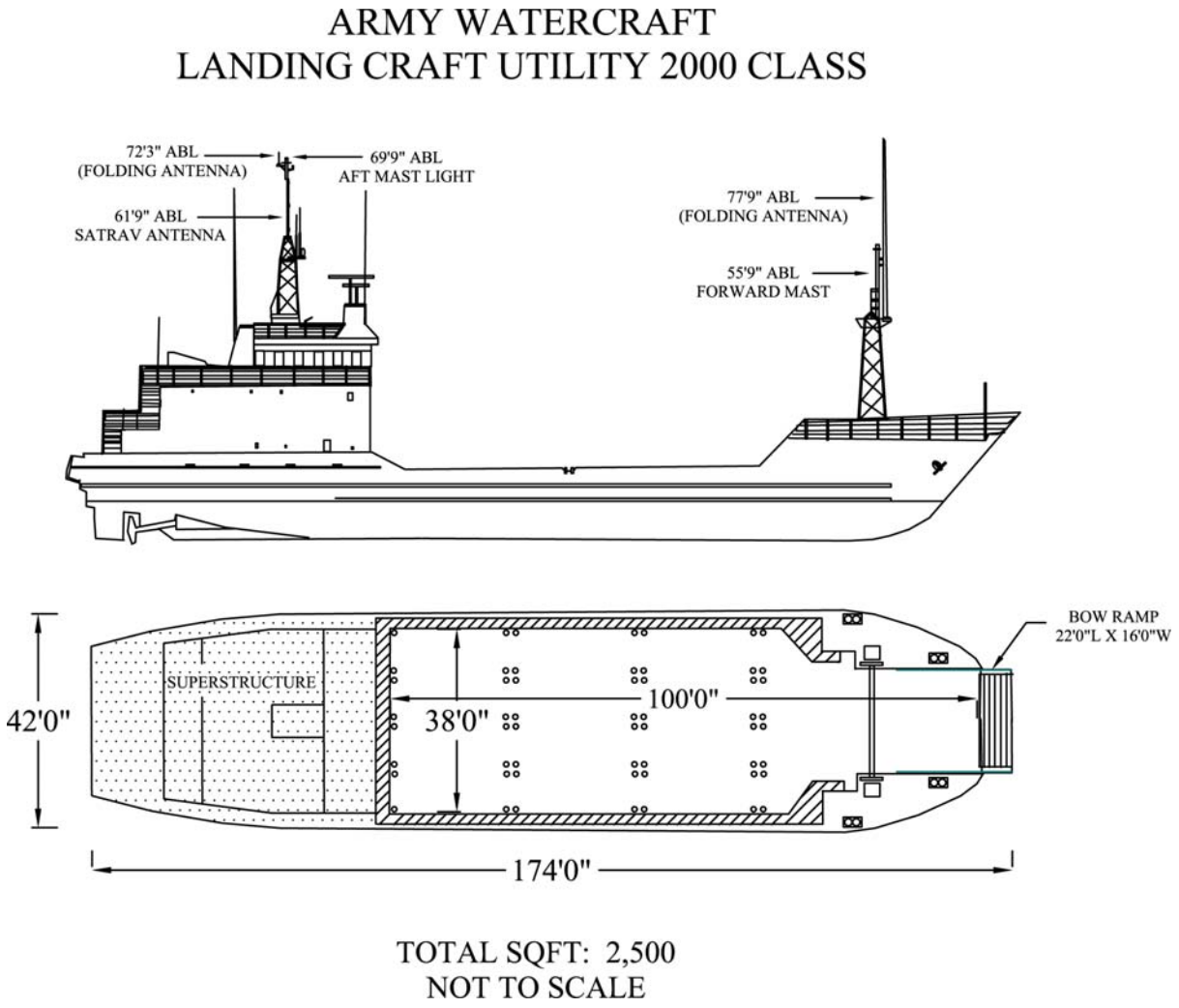

Figure 21. Landing Craft, Utility (LCU 2000).

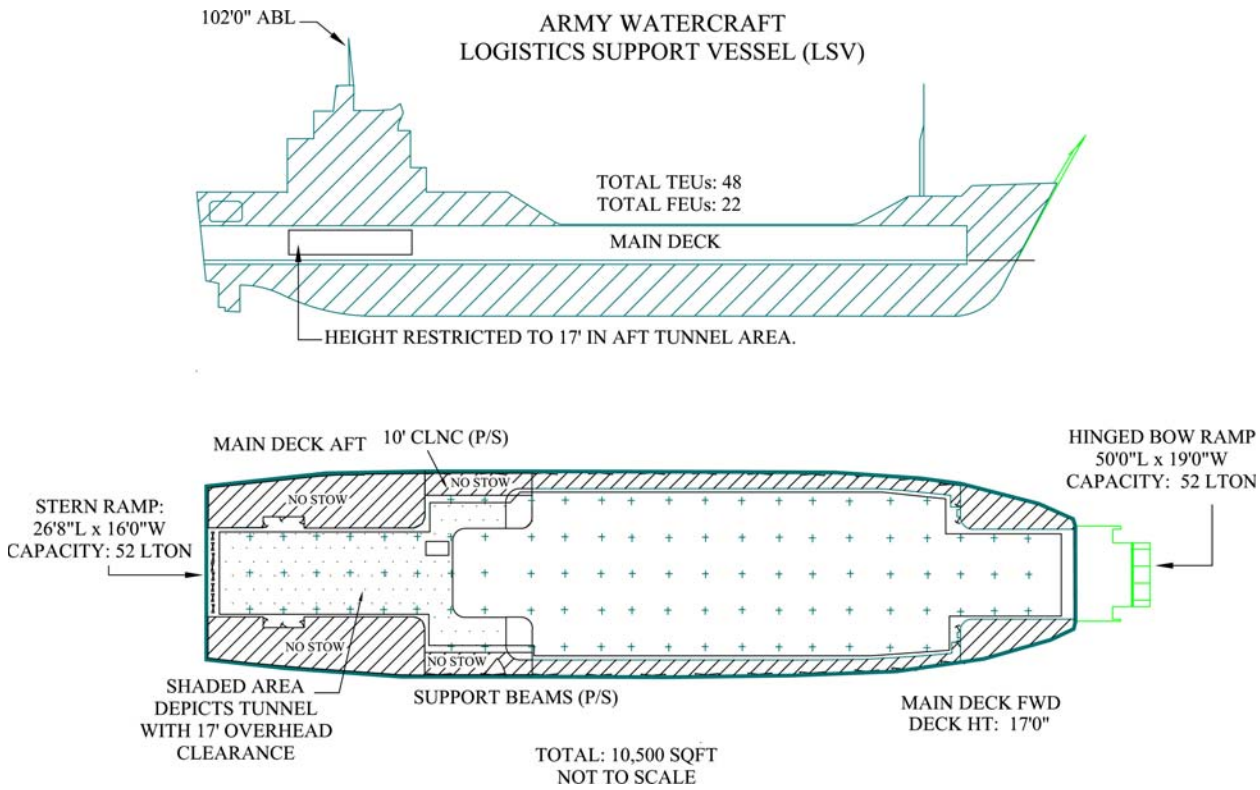

Figure 22. Logistics Support Vehicle (LSV).

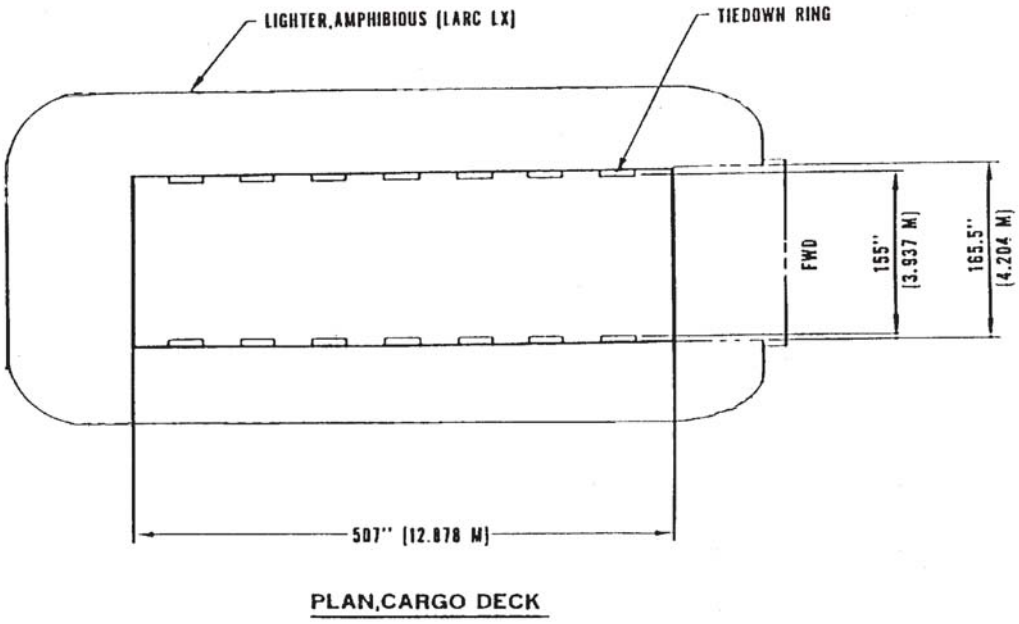

Figure 23. Lighter, Amphibious (LARC-LX).

Table 18. LCAC characteristics

Characteristics	Dimension/Descripton
Length Hull (Less Cushion) On Cushion (Conventional Skirt) On Cushion (Deep Skirt)	 81'10" 87'11" 91'9"
Beam Hull (Less Cushion) On Cushion (Conventional Skirt) On Cushion (Deep Skirt)	 46'9" 47'0" 49'2" @ reduced N2 47'8" @ design N2
Ramp Opening Width Bow Stern	 28'4" 14'10"
Cargo Deck Dimensions [1]	67'0" x 27'0"
Light Craft [2] (as delivered)	193,770 - 208,578 lb
Maximum Speed (With 60-ton Payload) SWH of 0.5' to 1.0' (Structural Limit) [3] SWH of 3.5' to 5.0' (Structural Limit) [3] Over land (Terrain dependent)	 50 knots 35 knots 25 knots

1. Aft cargo ramp area provides an additional 160 square feet of cargo space.
2. Light craft weights vary as a function of hull number and configuration status. Actual light craft weight must be obtained from the craft log book. This weight, in addition to hull, includes fixed equipment, stores, lube and hydraulic fluids, and unusable fuel (plus crew).
3. Structural limit refers to the maximum speed at which LCAC structure is designed to safely operate. These figures shall not be used for mission planning.

LCAC are high-speed, up to 50 knots, ship-to-shore and shore-to-ship amphibious craft. LCAC characteristics are shown in table 18. LCAC performance capabilities are shown in table 19. LCAC are used to move supplies and weapons systems with associated combat personnel to point(s) of need during amphibious operations.

LCAC are being modernized through a Service Life Extension Program (SLEP). This program does not change LCAC dimensions, but it does increase the maximum allowable craft weight (see table 19) and it changes the optimal longitudinal center of gravity (LCG) position. All characteristics changed by SLEP are indicated as SLEP LCAC. Regardless of listed capabilities, LCAC is much like an aircraft in operational capability. In hot weather, LCAC capabilities are significantly reduced. It should also be noted that in most cases LCAC loads are limited by cargo weight and not by cargo square footage. Likewise, deep skirt is also a modification to the skirt system, which allows the craft to operate higher above the water thus reducing the possibility of damage to the craft in high sea conditions. This modification is a part of SLEP, but also is installed on some standard LCACs.

5.3.8.4.1 Cargo deck and ramps.

The LCAC cargo deck has approximately 1,969 square feet and accommodates all combat and combat support equipment currently in the Marine Corps inventory. It is constructed of 3/8-inch aluminum plate with internal longitudinal tee stiffeners spaced every 9 inches, and athwartships framing every 4 feet. Four tie down rails run the length of the deck. The rails are constructed of extruded aluminum sections welded flush with the deck. Tie down sockets, 2 inches in diameter, are located on each rail. Stainless steel inserts in the sockets accept a standard grab hook assembly. Socket horizontal and longitudinal pull angles range from 15 to 80° from horizontal. The bow ramp, 28 feet 4 inches wide by 8 feet 6 inches high, and the stern ramp, 14 feet 10 inches wide by 8 feet 6 inches high, both are operated by hydraulic cable winches, two for the bow and one for the stern ramp. These ramps are hinged at the base and open downward to provide a ground to craft interface. Cargo deck with dimensions is shown in figure 24.

5.3.8.4.2 Strength limits.

The cargo deck load limitations are as shown in figure 25. The areas near the center rails have additional strengthening for support of tracked vehicles and other vehicles with a gross weight over 50,000 pounds. Bow and stern ramps are capable of withstanding all cargo loads provided the ramp is extended to the ground position prior to loading. For specific limitations for the craft and cargo deck, refer to table 20.

5.3.8.4.3 Environmental conditions.

The LCAC cargo deck is an open area where cargo is subject to all environmental conditions. This includes wind, salt spray, dirt, green water, rain, and other debris. Cargo is also subject to propeller and bow thruster forces, which include the suction/venturi effect from forward flight and rapid propeller pitch change forces that would be encountered during a craft emergency stop where the propellers and bow thrusters are

Table 19. LCAC capabilities

Variant	Ambient Air Temp Total Allowable Craft Weight		
	60° F	80° F	100° F
LCAC	355,000 lbs	343,000 lbs	322,000 lbs
SLEP LCAC	363,000 lbs	363,000 lbs	363,000 lbs
Total Allowable Craft Weight is calculated using a series of performance tables to determine significant wave height, shallow water correction and ambient air temperature, all of which affect LCAC performance. The above calculations assume a 3-foot significant wave height combined with a 20-foot shallow water correction factor calculated at 60, 80, and 100-degree Fahrenheit ambient air temperatures for both standard and SLEP LCAC.			

Table 20. LCAC specific limitations for the craft and cargo deck

Item	Limitation
Maximum Allowable Craft Weight (includes light craft weight, fuel cargo, embarked personnel)	368,250 lbs conventional skirt; 372,700 lbs deep skirt 389,984 lbs SLEP LCAC
Optimal Operational (cargo and fuel) Longitudinal Center of Gravity (LCG) from the Forward Perpendicular (FP)	490-495 inches Standard LCAC 480-485 inches SLEP LCAC
Optimal LCG Loaded (lightship plus cargo)	487 inches Standard LCAC 481 inches SLEP LCAC
Optimal Transverse Center of Gravity (TCG)	Centerline
Maximum Allowable Footprint Without Shoring	80 psi
Tracked and Wheeled Vehicles over 50,000 lbs	Center rails only
6000-lb Forklift (hard rubber tires) movement on deck load limit	3,000 lbs

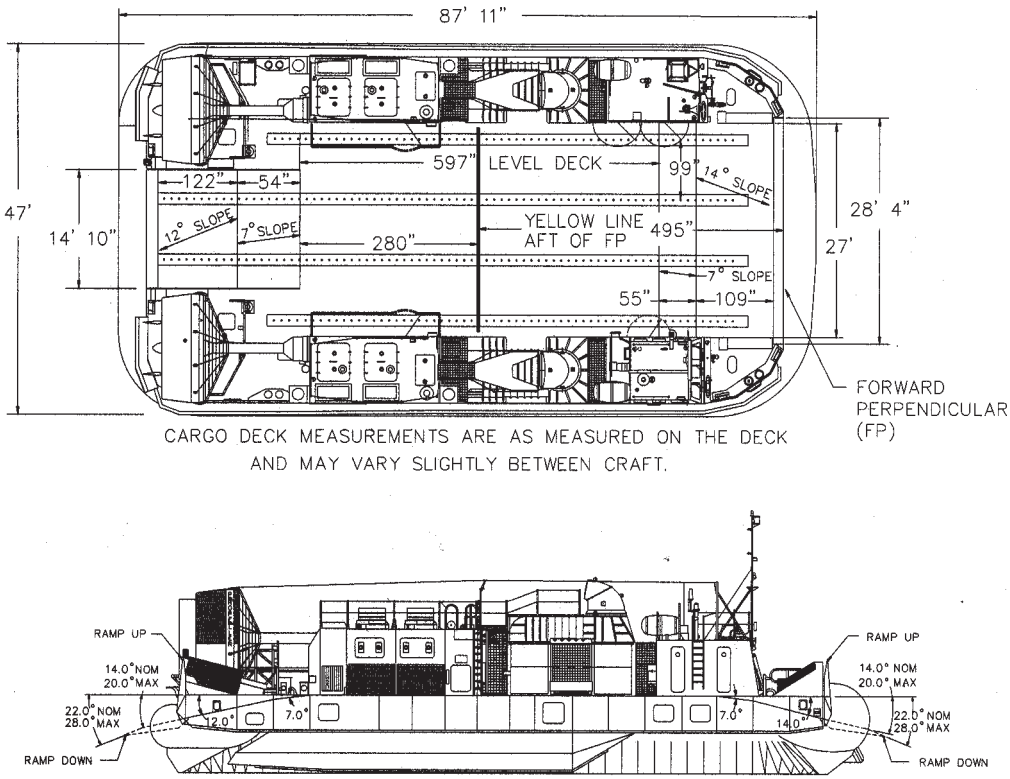

Figure 24. LCAC cargo deck dimensions.

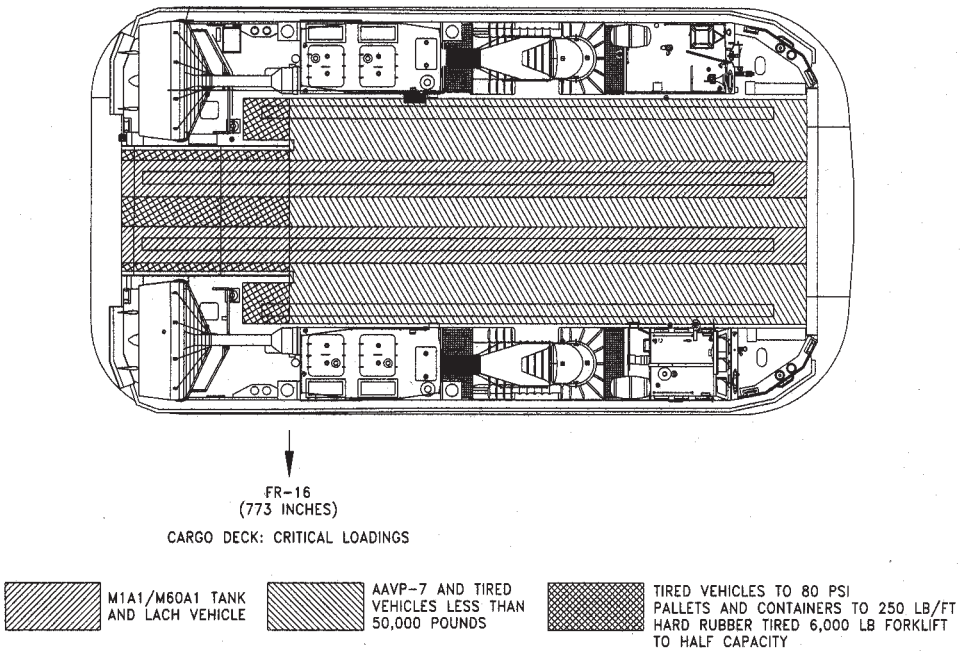

Figure 25. LCAC cargo deck load diagram.

rapidly reversed. LCAC is limited to 50 knots forward speed and with wind speed of 25 knots common in the operating areas, cargo can easily experience 75 knots of wind over the deck. This does not include the salt spray/green water or rapid reverse propeller pitch operations that dramatically increase the loading on cargo. These environmental conditions have a major negative impact on transporting soft-top vehicles. Numerous Class A mishaps have occurred due to soft tops coming loose and being sucked into LCAC propellers. Likewise, doors on soft-top vehicles have come off during transport and created Foreign Object Debris (FOD) problems. Studies are currently underway to determine loading factors on LCAC cargo. Until the loading factors are known and steps are taken to minimize the risk to LCAC operations, soft-top vehicles that show significant wear may be required to have the soft-top removed prior to transport.

5.3.8.4.4 Tiedown rails.

The cargo deck has four rows of tiedown rails spaced approximately 99 inches apart with 2-inch diameter receptacles located between 12 and 15 inches apart along the entire length of the tiedown rail. The ultimate load capability for each tiedown socket is 40,250 pounds; working load is 35,000 pounds at the optimum 30° restraint angle.

5.3.8.4.5 LCAC cargo restraint criteria.

The amount of restraint that must be used to keep cargo from moving in any direction is “restraint criteria.” It is expressed in units of the force of gravity or “Gs” the cargo must overcome. The G’s required to be restrained in four directions for both peacetime training and combat loads are shown in table 21. Both tiedown arrangements provide for the safe transport of cargo aboard the LCAC, but the peacetime training plan provides a lower risk for damage to the LCAC and cargo loads during non-combat operations.

Table 21. LCAC cargo restraint requirement

Direction	G's	
	Peacetime	Combat
Forward	1.5	1
Aft	1	0.5
Side/Transverse	1	0.5
Vertical	1.5	0.5

5.3.8.4.6 LCAC Heavy weather restraint criteria.

Heavy weather cargo restraint is defined as the restraint required in G's to restrain cargo when the LCAC is secured in the well deck of a ship and the ship is subject to Significant Wave Heights (SWH) of 29.5 to 45.5 feet. Tiedown requirements vary by ship type. The maximum G requirements for heavy weather are provided in table 22.

Table 22. LCAC G-force requirements for heavy weather transport

G's		
Longitudinal	**Side/Transverse**	**Vertical**
1.35	2.88	3.44

5.3.8.5 Future watercraft.

Significant changes are being made to the watercraft fleet. These changes will affect watercraft doctrine, policy, deployment training, technology, and material. Transforming the watercraft fleet into a fully modernized Force Projection enabler is one of the key doctrinal changes that are being made. Shallow-draft and high-speed capabilities are being pursued to reduce the in-theater logistics footprint and provide combatant commanders with the agility and flexibility to quickly move forces. One of the most viable alternatives to provide the watercraft fleet with this agility and flexibility is the Joint High Speed Vessel (JHSV). The JHSV will be the next generation of self-deploying watercraft. The JHSV program is a Navy led acquisition of a platform intended to support users in the Department of the Navy and Department of the Army. The JHSV will be capable of transporting personnel, equipment, and supplies over operational distances in support of maneuver and sustainment operations. The JHSV will include a flight deck for helicopter operations and an offload ramp that will allow vehicles to quickly drive off the ship. It will be shallow draft (under 15 feet). Four prototype high-speed vessels, Joint Venture (HSV X1), Spearhead (TSV 1X), Swift (HSV X2), and the West Pac Express have already been used to support operations in the Global War on Terror (GWOT), Iraqi Freedom, the Horn of Africa, Persian Gulf, Southeast Asia, Tsunami, and hurricane relief. These vessels were able to access ports inaccessible to other ships in the logistics force and played a critical role in the early delivery of supplies. Table 17 shows dimensional constraints for these vessels.

5.3.8.6 Designing for transport aboard amphibious ships.

When transport aboard amphibious shipping is a requirement, the materiel developer and/or contractor shall design S/E to the constraints identified in the Ship's Loading Characteristics Pamphlet (SLCP) for the required class of amphibious ship. The LHA, LHD, LPH, LPD, LSD, and LST comprise the list of available amphibious ships. The U. S. Navy prepares SLCPs for each amphibious ship. Some of these

SLCPs are available online at www.fas.org. These SLCPs are submitted by the ship, approved by group and are reviewed by the Type Commanders. SLCPs can be obtained by contacting the appropriate Amphibious Group responsible for the specific vessel.

5.4 Fixed-wing air transport.

Fixed-wing aircraft are available for both tactical and strategic cargo missions. Tactical missions generally cover shorter distances, can use airdrop, and may require short field takeoffs or landings. Strategic missions are generally intercontinental from and to large, secure airfields.

5.4.1 Flyable system weight.

S/E air transport weight must be based on realistic aircraft cargo capability. Each aircraft has a published maximum payload rating based on optimum flight conditions. However, operational planning factors, such as flight altitude and air temperatures, will likely reduce actual payload for a given range. In addition to this are “real-world aircraft factors” such as aircraft weight increases, age or other conditions that further reduce actual mission payload.

5.4.2 U.S. military fixed-wing cargo aircraft.

The following list shows fixed-wing cargo aircraft for the various services.

Air Force cargo aircraft:

C-5A/C-5B (Lockheed Martin (formerly Lockheed))
C-17 (Boeing (formerly McDonnell Douglas))
C-130E/C-130H (Lockheed Martin (formerly Lockheed))
C-130J (Lockheed Martin updated C-130)
C-27 (Alenia G-222)

Army cargo aircraft:

C-23A/B (Shorts 330)
C-12 (Beechcraft King Air 200)

Navy/Marine Corps cargo aircraft:

C-2A (Grumman, Carrier Onboard Delivery (COD))
C-9B (Boeing)
LC-130/KC-130J/KC-130R (Lockheed Martin)
C-12B (Beechcraft, Super King Air 200)

Other military aircraft types with limited cargo capabilities and/or limited numbers:

C-5C (2 modified C-5As used for Space Shuttle payloads)
KC-10 (Boeing (formerly McDonnell Douglas) DC-10-30 tanker)
KC-135A/E/R (Boeing 707 Tanker)
C-9A (21 Med-Evac Boeing (formerly McDonnell Douglas) DC-9-30s)

C-20 (Gulfstream IV)
C-21 (Learjet)
U-21 (5 Beechcraft King Air 100s)
C-22B (4 Boeing 727-200s)
HU-25 (Dassault USCG “Falcon”)
VC-25A (4 Boeing 747-200s)
C-26A (Fairchild Metro 3)
C-29A (British Aerospace 125-800)
C-32A (4 Boeing 757-200s; to replace VIP VC-137s)
C-40A (Boeing 737-700; to replace Navy C-9s)
CT-43 (12 Boeing 737-200s; converted T-43 trainers)

5.4.3 Design data.

MIL-HDBK-1791, *Designing for Internal Aerial Delivery in Fixed-Wing Aircraft,* is the primary source of design data for military equipment intended for transport in Air Mobility Command (AMC) or Civil Reserve Air Fleet (CRAF) fixed-wing aircraft. MIL-HDBK-1791 also includes design requirements for airdrop from AMC aircraft.

5.4.4 Air cargo handling.

On military aircraft, most vehicles are loaded, restrained, and carried directly on the aircraft floor. Wheeled and tracked vehicles must be able to negotiate and crest a 15° ramp while maintaining weight distribution among the wheels/roadwheels to accomplish unassisted loading (MIL-HDBK-1791). General cargo may also be palletized and carried in the aircraft’s 463L cargo handling system, which consists of rows of conveyor rollers and guidance/restraint rails designed to interface with the pallets/platforms. Airdrop cargo is loaded on airdrop platforms or plywood skidboards. Most aircraft are equipped with a cargo winch to assist in loading wheeled and palletized cargo.

5.4.4.1 Shoring.

Standard sized lumber and plywood are both used to shore aircraft loads. Shoring is used to protect the aircraft floor, distribute cargo load over a larger area of aircraft floor (and substructure), and, on occasion, to reduce the ramp-angle during vehicle loading (see MIL-HDBK-1791). Shoring weight is part of the aircraft payload, reducing the usable payload available for military equipment. On international flights, shoring must meet treatment requirements to prevent the transport of insects and disease. The shipper is responsible for any required shoring; it is not provided by the Air Force. Systems should be designed to minimize the requirements for shoring to limit the future logistics burden during air movement and minimize volume of solid waste generated.

5.4.4.2 463L cargo handling system.

This is the standard military air cargo system. The 463L cargo system includes aircraft specific equipment and airfield material handling equipment (MHE). The 463L cargo pallet is a major part of the system. The 10,000-pound (4535 kg) capacity 463L pallet has a flat aluminum deck ~84" by ~104" (~2.1 m by ~2.6 m), 88" by 108" (2.2 m X 2.7 m) overall including fixed locking lugs. The 2.25-inch (57 mm) thick 463L pallets can

be connected together to accommodate longer items. This pallet is compatible with some commercial cargo systems. Loading the pallet into the aircraft is accomplished with a roller floor equipped K-loader. This vehicle includes an adjustable cargo deck to match the height, pitch, and alignment of the aircraft deck and rail system. This prevents both overloading aircraft rollers and the binding of pallets against the rails as they are loaded. Because aircraft deck heights vary, straight-in loading of palletized cargo from standard cargo vehicles is typically not possible.

5.4.5 Air transport by DOD controlled aircraft.

Equipment requiring air transport by DOD operated or leased aircraft (CRAF or other) shall be designed to meet the weight, size, and restraint (tiedown) limitations of the specified aircraft. The aircraft that make up the long-range portion of CRAF cargo fleet are the wide-body B-747, MD-11, DC-10, and the narrow-body DC-8. The floor strengths of these aircraft are low, so they are limited primarily to the transport of pallets and some light vehicles.

5.4.5.1 AMC and CRAF fixed-wing aircraft.

Items that approach aircraft capacity limits in size, weight, ramp angle or other loading consideration shall be reviewed by the USAF Aeronautical Systems Center (ASC) as required by DODI 4540.7. A successful review results in certification for internal air delivery. The ASC review can lead to an aircraft test loading of the item to support the certification for internal air delivery. A listing of certified items is maintained by ASC and made available to AMC aircraft loadmasters with memorandums detailing any special loading considerations. Items requiring frequent airlift and involving complex loading procedures are documented and published by AMC in the specific AMC aircraft loading manual (TO-1C-XX-9).

5.4.5.2 AMC fixed-wing aircraft characteristics.

Restraint criteria for AMC fixed-wing air transport are given in table 23. Figures 26-28 and tables 24-25 give dimensional and payload characteristics for various AMC fixed-wing aircraft. Detailed information on aircraft floor strength and ramp restrictions including overhang and projection limits is included in MIL-HDBK-1791. The KC-10 and KC-135 are tanker aircraft with some payload capability. Since their primary mission is the tanker mission, S/E missions will be limited. These aircraft are suitable for transport of cargo pallets and small vehicles.

Table 23. Crash restraint criteria for Air Force fixed-wing aircraft

Aircraft Type	Forward G's	Aft G's	Lateral G's	Up G's	Down G's
C-130, C-17, C-5	3	1.5	1.5	2	4.5
KC-10	9 [1]	1.5	1.5	2	4.5
KC-135	8 [2]	1.5	1.5	2	4.5

1. 1.5 G's with cargo barrier net.
2. 3 G's without passengers or with major command authority.

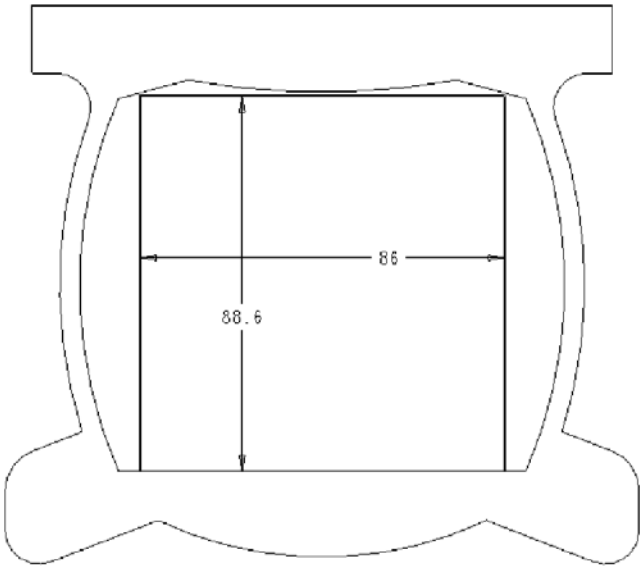

C-27 equipment design limit cross-section

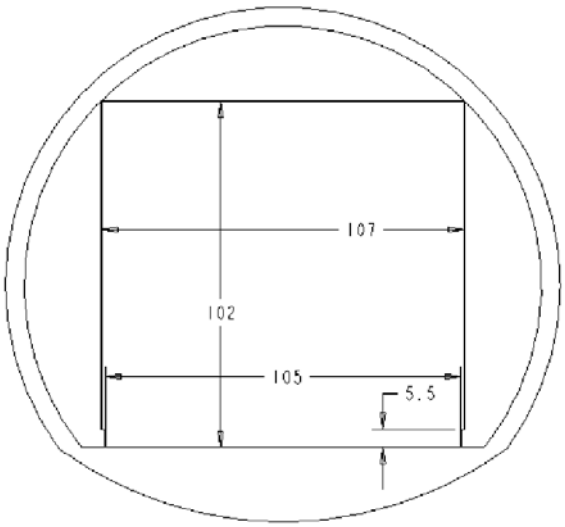

C-130 equipment design limit cross-section

Figure 26. C-27 and C-130 equipment design limit cross-sections (dimensions are in inches).

Table 24. C-27 and C-130 information

Aircraft	Equipment Design Dimensions (inches, m) [1]			Aircraft Capabilities [2]	
	Length	Width	Height	ACL for 3,200 nm (lb, kg)	Range (nm) w/max ACL (lb, kg) [3]
C-27	337 8.6	86 2.2	88.6 2.25	N/A[4]	700/20,000 700/9070
C-130 E/H/J (short)	468[5] 12.5	107[6] 2.7[7]	102 2.6	N/A[8]	60/42,000 60/19 050
C-130J-30 (long)	636 16.8	107[6] 2.7[7]	102 2.6	N/A[9]	90/43,000 90/19 504

1. Dimensions allow for 6-inch (152 mm) clearance top and both sides. Length dimension does not include usable ramp area. Compliance with these dimensions does not guarantee an item will be certified for transport in an AMC aircraft. See MIL-HDBK-1791 for details.
2. Refer to AF Pamphlet (AFP) 10-1403 and MIL-HDBK-1791 for detailed aircraft limits.
3. Published Allowable Cabin Load (ACL). Range based on still air, one-way, and flying at best altitude/cruise speed. It is very rare for the aircraft to fly with these ACLs. These ACLs are included for information only and should not be used for design purposes.
4. 2,800 nm max range.
5. Item length shown is reduced to allow for forward and aft restraint space, and to allow crew access.
6. Width at the aircraft floor up to height of 5.5 inches is 105.62 inches.
7. Between C-130 fuselage stations 477 and 617 the maximum allowable width is 99 inches (2.5 m) to open a safety aisle for crew passage.
8. 2,900 nm max range for C-130E/H, 2,600 nm max range for C-130J(short).
9. 2,600 nm max range.

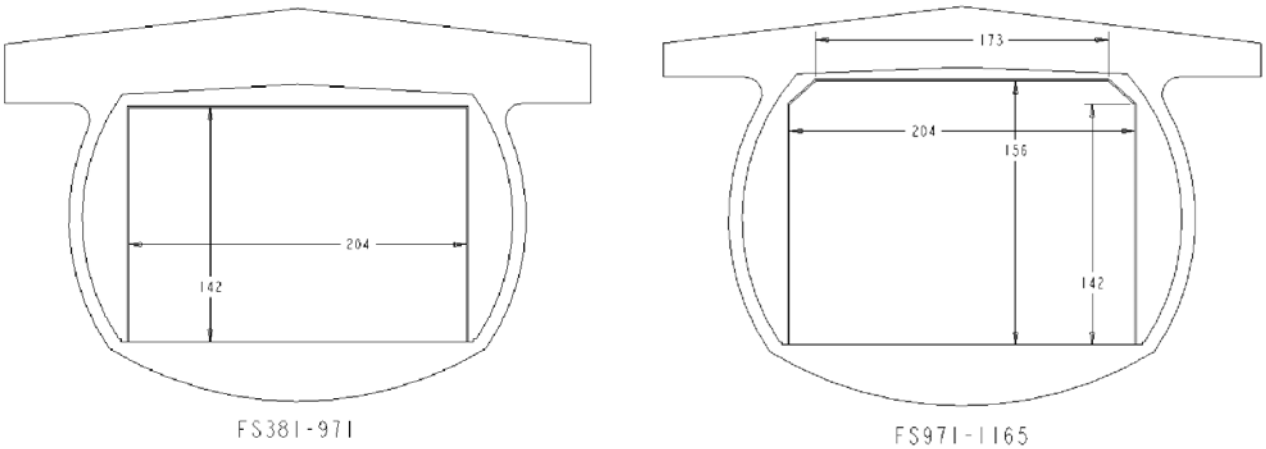

Figure 27. C-17/C-17ER equipment design limit cross section (dimensions are in inches).

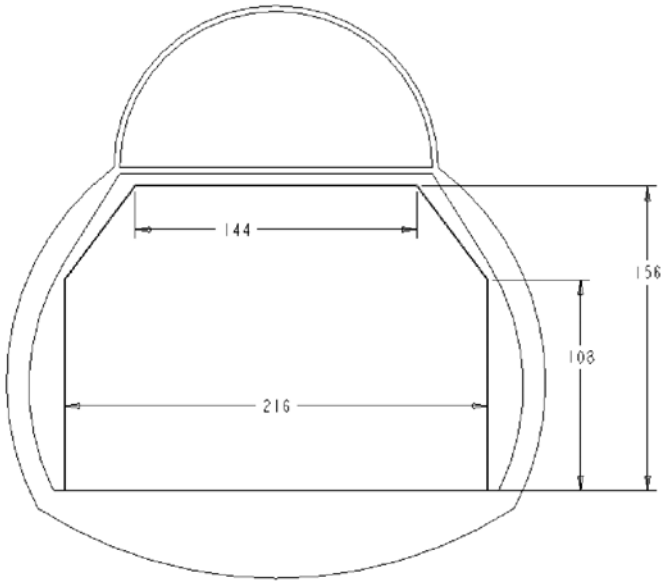

Figure 28. C-5 equipment design limit cross section (dimensions are in inches)

Table 25. C-17/C-17ER/C-5 Cross-sectional information.

Aircraft	Equipment Design Dimensions (inches, m) [1]			Aircraft Capabilities [2]	
	Length	Width	Height	ACL for 3,200 nm (lb, kg)	Range (nm) w/max ACL (lb, kg) [3]
C-17/C-17ER cargo deck	784 19.9	204 5.2 [4]	142 to 156 3.6 to 4.0 [5]	130,000 58 900	2,300 nm 167,400/164,900 75,931/76,158
C-17/C-17ER ramp	238 6.0	204 5.2	127 3.2	40,000 [6] 18 144	40,000 [6] 18 144
C-5 cargo deck	1,454 36.9	216 5.4	156 3.9	178,000 80 700	1,600/265,000 1,600/120,200
C-5 fwd ramp	116 2.9	216 5.4	142 3.6	15,000 [6] 6804	15,000 [6] 6804
C-5 aft ramp	155 3.9	216 5.4	142 3.6	15,000 [6] 6804	15,000 [6] 6804

1. Dimensions allow for 6-inch (152 mm) clearance top and both sides. Length dimension does not include usable ramp area (fore and aft on C-5). Compliance with these dimensions does not guarantee an item will be certified for transport in an AMC aircraft. See MIL-HDBK-1791 for details.
2. Refer to AF Pamphlet (AFP) 10-1403 and MIL-HDBK-1791 for detailed aircraft limits.
3. Published Allowable Cabin Load (ACL). Range based on still air, one-way, and flying at best altitude/cruise speed. It is very rare for the aircraft to fly with these ACLs. These ACLs are included for information only and should not be used for design purposes.
4. Front section of cargo deck is only 116 inches (2.9 m) wide. This portion has been excluded from the 784 inch length.
5. The height of the cargo deck is 142 inches under and forward of the wing box and 156 inches aft of the wing box.
6. Maximum load allowed on ramp, independent of range. Ramp payload is part of maximum aircraft payload.

5.4.5.3 AMC fixed-wing aircraft deployability.

The maximum aircraft payloads are not the anticipated payloads that would be used during strategic deployment. Deployment payloads depend on the mission range and flight conditions encountered. Aircraft payload is any item placed on the aircraft for transport. This includes not only the S/E, but also its crew when transported along with the item, and any shoring required. Aircraft range is not the distance between airfields but includes standard or wartime departure/approach patterns, weather diversions, and avoiding restricted airspace. It is possible for the flight distance between airfields to be significantly greater than the straight-line distance, as demonstrated by flights between Germany and Bosnia that did not have clearances to fly over neutral countries.

a. Strategic Deployment. The C-5 and C-17/C-17ER are the military aircraft for equipment deployment. The C-141 is no longer in service. S/E should no longer be designed for transport on this aircraft. A range of 3,200 nautical miles (nm) is required to support efficient worldwide deployment. Conditions that reduce aircraft payload include temperature, altitude, runway lengths and winds encountered. To ensure deployment analyses reflect real-world deployment conditions in most operational scenarios, the payloads that should be used for the C-17, C-17ER, and C-5 are 130,000 pounds (58 900 kg), 127,500 pounds (57 800 kg) and 178,000 pounds (80 700 kg), respectively. While reduced range will allow increased payload, other factors (ground time for intermediate stops, the potential for mission abort at intermediate airfields, and less direct routing) result in reduced air fleet throughput.

b. Tactical deployment. Tactical deployment is accomplished by the C-130 and C-17/C-17ER. The C-130 has access into more airfields because of its lesser ground pressure and greater tolerance to a dust environment. For this reason, equipment with a tactical air deployment mission should be designed for C-130 transport. While the C-130 is capable of transporting 38,000 pounds for 860 nautical miles under near ideal conditions (15° centigrade, sea level takeoff, no-wind and level-dry runway), these conditions are not often met. Increases in temperature and altitude quickly reduce the payload capability of the C-130. To ensure C-130 transport is available under widely varying conditions, S/E should weigh no more than 24,000 pounds when C-130 tactical transport is required.

When tactical transport by a C-17 or C-17ER is required, S/E should weigh no more than 167,400 pounds or 164,900 pounds, respectively, when the landing surface is paved. If the landing surface is unpaved, then S/E should weigh no more than 141,000 pounds and 138,500 pounds for the C-17 and C-17ER, respectively.

c. Assault Landings. Assault landing procedures (steeper approach angle and firmer touchdown) are used when the runway is shorter and/or narrower than required for a normal landing. The dimensions, rather than the surface type (for example, dirt versus concrete) generally are the controlling factors in determining whether assault landing procedures must be used. An aircraft can make a normal landing on an

adequately long and wide dirt runway. Conversely, an aircraft would have to make an assault landing on a paved runway that was not sufficiently long and/or wide for a normal landing.

Operation of the C-130 into any airfield with a length between 3,000 feet and 5,000 feet, and/or a width between 60 feet and 80 feet is considered an assault landing. The maximum payload the C-130 can deliver by assault landing is 35,000 pounds. If aircraft fuel is not available at the assault airfield, this payload is further reduced to allow aircraft fuel for a recovery flight.

Operation of the C-17 into any airfield with a length between 3,500 feet and 5,000 feet, with a width of at least 90 feet, is considered an assault landing. The maximum payload is not limited when doing assault landings on a paved runway. Also, there is no further reduction beyond the numbers shown in paragraph 5.4.5.3(b) when doing assault landings on unpaved runways.

5.4.5.4 Navy and Marine Corps fixed-wing aircraft.
General design guidance, based on aircraft capacity limits, is given in tables 26-28. NAVAIR certifies equipment for transport on Navy and Marine Corps aircraft.

5.4.5.5 Army fixed-wing aircraft.
General design guidance, based on aircraft capacity limits, is given in tables 29-31.

5.5 Air delivery by Low Velocity Airdrop (LVAD).

5.5.1 General.
LVAD (that is ~28 ft/sec (8.5 m/sec) parachute retarded descent) is used to support mass assault or resupply military operations. The C-130, C-5, and C-17 aircraft have airdrop capabilities. Energy-dissipating material placed between the item and the airdrop platform (see para 5.5.3) mitigates landing shock. Rigged load height (item, cushioning material and airdrop platform) vary with aircraft type and is shown in table 32. Acceptable item height also varies with equipment type and is shown in table 33. Maximum gross rigged weights (GRW) for LVAD are shown in table 34. For equipment design purposes, the maximum allowable item weights for LVAD are shown in table 35. Actual weight allowed may vary based on final rigging procedures.

5.5.2 LVAD criteria.
MIL-HDBK-669, MIL-STD-814 and MIL-HDBK-1791 provide further detailed airdrop criteria.

5.5.3 Airdrop platform.
The airdrop platform is similar to the 463L cargo pallet. An airdrop platform is 108 inches (2.7 m) wide (across the locking lugs) and 3-1/2 inches thick. It is assembled in lengths ranging from 8 to 32 feet (2.4 to 9.7 m), in 4-foot (1.2 m) increments.

Table 26. Navy/Marine Corps fixed-wing cargo aircraft capabilities

Aircraft	Flight Conditions	Take-off Weight (lb, kg)	JP-5 Fuel Internal/[External] (lb, kg)	Payload (lb, kg)	Still-Air Range [4] (Nautical Miles)
C-2A(R) [1] Cargo Cage	Basic Cargo Mission	54,354 24 650	12,400/[N/A] 5600/[N/A]	7,240 3300	1,350
C-2A(R) Without Cargo Cage	Max. Payload Mission	54,354 24 650	9,400/[N/A] 4250/[N/A]	10,000 4530	950
KC-130R	Max. Payload 2.5 Load Factor (LF) [2]	155,000 70 300	47,328/[0] 21 500/[0]	34,965 15 860	3,000
KC-130R	Max. Fuel 2.5 LF	155,000 70 300	47,328/[15,592] 21 500/[7100]	19,373 8800	4,500
KC-130R	Max. Payload (Overload) 2.25 LF	175,000 79 379	47,328/[9,965] 21 500/[4500]	45,000 20 400	3,500
C-9B	8 463L Pallets	110,000 49 895	18,215/[N/A] 8260/[N/A]	32,444 14 700	1,000
C-9B	6-1/2 463L Pallets [3]	110,000 49 895	27,779/[N/A] 12 600/[N/A]	22,880 10 400	1,900

1.Re-procurement C-2A Carrier Onboard Delivery (COD) Aircraft. The cargo cage consists of structural members that, when installed, provide a solid structural envelope within the cabin compartment. The cargo cage retains cargo to the ultimate load limits of the aircraft.
2. Flight maneuver "G" limit.
3. Half-size 463L pallet: 54" x 88" (1.4 m X 2.2 m).
4. Standard day flight conditions, best cruise altitude.

Table 27. Design constraints for Navy/Marine Corps fixed-wing aircraft

Aircraft	Cargo Opening		Cargo Compartment			
	Width (in., m)	Height (in., m) [1]	Length (in., m)	Width (in., m)	Height (in., m)	Floor Load (lb/ft^2, kPa) [3]
C-2A Rear Ramp 2	88/66 2.2/1.6 [Floor /Top]	65 1.6	325 8.2	86 2.1	63 1.6	300 14.3
KC-130R/ KC-130J Rear Ramp	120 3.0	106 2.7	492 12.4	120 3.0	106 2.6	50 psi 340 kPa Local pressure
C-9B Side door	136 3.5	80 2.0	725 18.4	115 2.9	80 2.0	300 14.3
C-12B Side door	52 1.3	52 1.3	156 3.9	48 1.2	40 1.0	200 9.5

1. Airframe dimensions. Side and top clearance is required. For C-9 and C-130 allow 6 in. (152 mm) at top and 5 in. (127 mm) on both sides. For C-2 and C-12 allow 6 in. (152 mm) at top and 10 in. (254 mm) on one side (for crew passage) and 5 in. (127 mm) on the other side.
2. When C-2 "cargo cage" is installed use: 83/57 in. (2.1 m/1.4 m) (floor-line/ top) and 63 in. (1.6 m) for opening height.
3. Structural floor load limit for entire cargo compartment. See specific aircraft NATOPS Flight Manual and/or Cargo Loading manual.

Table 28. Cargo restraint criteria for Navy/Marine Corps fixed-wing aircraft

Type/ Category of Aircraft[1]	Fwd G's	Aft G's	Lateral G's	Up G's
C-130	3	2	1.5	2
Fixed-wing cargo transport	3	2	2	2
Carrier Onboard Delivery (C-2)	20	7	7	4

1. For commercial derivatives, use g-levels above for applicable type/category or the FAA requirement, whichever is higher. For FAA requirements lower than the values above, approval will be based on guidelines set forth in NAVAIR Instruction 13100.15 "Engineering Technical Review of Commercial Derivative Aircraft Programs."

Table 29. Army fixed-wing cargo aircraft capabilities

Aircraft	Take Off Weight (lb, kg)	Fuel Burn (lb, kg) [1]	Payload (lb, kg) [2]	Still-Air Range (nm) [3]
C-12	12,500 5700	2,000 900	2,000 900	880
C-23A	22,900 10 400	1,600 725	4,950 2200	400
C-23B	25,600 11 600	1,990 900	7,280 3300	500

1. JP-4, Max range speed.
2. Max cargo weight.
3. Standard day flight conditions 10,000 ft.

Table 30. Design constraints for Army fixed-wing aircraft

Aircraft	Cargo Opening		Cargo Compartment			
	Width (in., m) [1]	Height (in., m) [1]	Length (in., m) [1]	Width (in., m) [1]	Height (in., m) [1]	Floor Load (lb/ft^2, kPa) [3]
C-23A Rear Ramp	63 1.6	75 1.9	296 7.5	70 17.8	75 1.9 [1]	Varies [3]
C-23B Rear Ramp Cargo Door [2]	70 1.7 55 1.3	75 1.9 65 1.6	306 7.7 50 1.2	67 1.7 65 1.6	75 1.9 60 1.6	Varies [3]
C-12 Side Door	52 1.3	52 1.3	167 4.2	54 1.3	57 1.4	200 9.5 [4]

1. Airframe dimensions. For C-23 and C-12 allow 6 in. (152 mm) at top and 10 in. (254 mm) on one side (for crew passage) and 5 in. (127 mm) on the other side. When C-23 has cargo rollers installed, use 72.5 inches (1.8 m) for the compartment height.
2. The left-side crew door can be used to load cargo. (On the C-23A this door is partially blocked by the flight mechanic seat.)
3. Floor structural capacity in main cabin varies from 125 to 150 lbs./ft2 (5.99 - 7.18 kPa). See flight manual for detailed loading limits.
4. Floor structural load limit for cargo placed on the seat tracks. Use 100 lbs./ft2 (4.79 kPa) for cargo placed on cabin decking.

Table 31. Crash restraint criteria for Army fixed-wing aircraft

Aircraft	Crash Load Restraint Criteria [1]				
	Fwd G's	Aft G's	Lateral G's	Up G's	Down G's
C-12	9	1.5	1.5	3	3
C-23A	9	1.5	4	3	6
C-23B	9	1.5	4	3	6

1. Crash restraint is based on tiedown provision strength (ultimate load) and additional tiedown lashing to item hard-points. Cargo nets are also used, when appropriate, on small items.

Table 32. LVAD rigged load height

	C-130	C-5	C-17
Height [1] (in., m)	100 2.5	105 2.6	118 2.9
Width (in., m)	108 2.7	108 2.7	126 3.2

1. Rigged load height is further restricted forward of the item's center of gravity to allow extraction under malfunction conditions (i.e., extraction parachute fails to fully deploy). Tip-off curves that establish these limits are in MIL-HDBK-1791.

Table 33. LVAD acceptable item height

	C-130	C-5	C-17
Height [1] (in., m)	90 2.2	95 2.4	108 2.7
Height [2] (in., m)	84.5 2.1	89.5 2.2	102.5 2.6

1. Allowable height for items (vehicles) with suspension systems (rubber tires and springs).
2. Allowable height for all other items (bulk, skid-based, etc.).

Table 34. Maximum gross rigged weights (GRW) for LVAD

C-130 (lb, kg)	C-5 (lb, kg)	C-17 (lb, kg)
35,000 [1] 15 875	42,000 [2] 19 050	42,000 [2] 19 050

1. Increases to 42,000 (19 050 kg) during contingencies.
2. Testing showed that this weight could increase to 60,000 (27 215), however the 60K rigging exists only in extremely limited quantities.

Table 35. Maximum allowable item weights for LVAD

C-130 (lb, kg)	C-5 (lb, kg)	C-17 (lb, kg)
28,305 12 839	34,200 15 512	34,200 15 512

1. Allowable item weight is based on the above GRWs and the formula:
   Item weight (lb) = (GRW - 1600)/1.18

5.6 Rotary-wing and tilt-wing air transport.

5.6.1 General.

Rotary-wing aircraft (helicopters) are used mainly for short-range, tactical missions. Tilt-wing aircraft allow vertical take-off and landing with greater aircraft range and speed in flight over helicopters. Cargo is transported either internally or suspended externally beneath the aircraft by special helicopter slings. Each aircraft has a published maximum payload rating based on optimum flight conditions. However, mission specifics and other factors will likely reduce actual flyable payload.

U.S. military cargo helicopters:

Army cargo helicopters:
UH-60A/UH-60L/MH-60K/UH-60Q/HH-60L (Sikorsky)
CH-47D/F (Boeing)
MH-47E (Boeing)

Navy cargo helicopters:
UH-1N (Bell)
SH-60B/SH-60F/HH-60H/MH-60R/MH-60S (Sikorsky)
CH-53E (Sikorsky)

US Coast Guard cargo helicopters:
HH-60J (Sikorsky)

Marine Corps cargo helicopters:
UH-1N/UN-1Y (Bell)
CH-46D/CH-46E (Boeing)
CH-53D/CH-53E (Sikorsky)

Air Force cargo helicopters:
UH-1N (Bell)
HH-60D/MH-60G (Sikorsky)

U.S. military tilt-wing aircraft:

Marine Corps tilt-wing aircraft:
MV-22 (Bell/Boeing)

Air Force tilt-wing aircraft:
CV-22 (Bell/Boeing)

5.6.2 Internal helicopter/tilt-wing transport.

Tables 36-41 give design limits on weight and dimensions for equipment intended for transport within Army and Navy/Marine Corps cargo helicopters. NATICK (see

Table 36. Design constraints for Army rotary-wing aircraft

Aircraft	Cargo Door [1]			Equipment Design Limits[2]			Floor Load (lb/ft^2, kPa)
	Location	Width (in., m)	Height (in., m)	Length (in., m)	Width (in., m)	Height (in., m)	
UH-60A/L/Q MH-60K HH-60L	Each side	68 1.7	52 1.3	127.5 3.2 [3]	50 1.2 [3]	46 1.1	300 14.3
CH-47D/F MH-47E [5]	Rear ramp	90 2.2	78 1.9	331 8.4	80 2.0	72 1.8	300 14.3 [4]

1. Airframe dimensions
2. Width dimensions allow a 5-inch (127 mm) clearance inside the centerline of the perimeter tiedown fittings. Height dimensions allow about 6-inches (152 mm) of clearance over cargo.
3. Usable cargo area is reduced to 92" long by 46" wide (2.3 m by 1.1 m) when door gunners are needed.
4. Up to 2,500 lbs/ft^2 (119 kPa) on the treadways.
5. External cargo hook capacities: Center hook - 26,000 lbs; Forward & aft hooks - 17,000 lbs. Tandem hookups single item maximum weight - 25,000 lbs.

Table 37. Crash restraint criteria for Army rotary-wing aircraft

Helicopter	Crash Load Restraint Criteria [1]				
	Fwd G's	Aft G's	Lateral G's	Up G's	Down G's
UH-60A/LQ MH-60K HH-60L	12	3	8	3	-
CH-47D/F MH-47E	4	2	1.5	2	4

1. Crash restraint is based on tiedown provision strength (ultimate load) and additional tiedown lashing to item hard-points. Cargo nets are also used, when appropriate, on small items.

Table 38. Design constraints for Navy/Marine Corps rotary-wing aircraft

Aircraft	Cargo Door			Cargo Compartment [1]			
	Location	Width (in., m)	Height (in., m)	Length (in., m)	Width (in., m)	Height (in., m)	Floor Load (lb/ft^2, kPa) [2]
UH-1 N/Y	Each side	91, 2.3	48, 1.2	59, 1.5	74, 1.8	48, 1.2	100, 4.7
SH-60 B/F/H/R	Each side	44, 1.1	54, 1.3	130, 3.3	73, 1.8	54, 1.3	225, 10.7 [3]
MH-60S	Each side	68, 1.7	54, 1.3	151, 3.8	72, 1.8	52, 1.3	300, 14.3
CH-46 D/E	Rear ramp	70, 1.7	69, 1.7[6]	290, 7.3	72, 1.8	69, 1.7	300, 14.3
CH-53 D/E[7]	Rear ramp	90, 2.2	75, 1.9[6]	360, 9.1	90, 2.2	75, 1.9[4]	300, 14.3
MH-53E[7]	Rear ramp	90, 2.2	75, 1.9[6]	360, 9.1	90, 2.2	75, 1.9[5]	300, 14.3
V-22	Rear ramp	68, 1.7	66, 1.7[6]	250, 6.3	68, 1.7	66, 1.7	300, 14.3

1. These are airframe dimensions and do not include required clearance between cargo and aircraft. Clearance required: 6 inches (152 mm) at top, 10 inches (254 mm) (minimum) on one side (for crew passage), and 5 inches (127 mm) on the other side. The V-22 requires 4 inches (102 mm) on each side.
2. Floor load limits are for distributed loads only. Refer to the specific aircraft NATOPS Flight Manual and/or Cargo Loading Manual for concentrated loads.
3. On SH-60F and HH-60H allowable floor loading varies from 75 lbs/ft^2 (3.59 kPa) in the forward cabin to 300 lbs/ft^2 (14.36 kPa) in the aft cabin. See specific aircraft NATOPS Flight Manual and/or Cargo Loading manual.
4. Mine Counter Measure (MCM) equipment reduces available height in aft cabin to 58 inches (1.47 m). See aircraft NATOPS Manuals.
5. Single-point cargo hook reduces height 2 inches (50 mm). See aircraft NATOPS Manuals.
6. Ramp level condition will reduce height values shown. See aircraft NATOPS Manuals.
7. Cargo hook capacities: Center hook - 36,000 lbs; forward & aft hooks - 25,000 lbs. Tandem hookups single item maximum weight - 36,000 lbs.

Table 39. Cargo restraint criteria for Navy/Marine Corps rotary-wing/tiltrotor aircraft

Fwd G's	Aft G's	Lateral G's	Up G's
4	3	3	3

Table 40. Army rotary-wing aircraft internal load capabilities for 30 nautical mile radius

Helicopter [1]	Sea level, 60°F (lb, kg)	2,000 ft, 70°F (lb, kg)	4,000 ft, 95°F (lb, kg)
UH-60A/Q [2]	8,050, 3650	7,500, 3400	4,850, 2190
UH-60L/HH-60L [2]	8,450, 3800	8,500, 3850	6,950, 3150
MH-60K	6,900, 3100	6,100, 2760	3,400, 1540
CH-47D	23,300, 10 500	23,350, 10 500	16,900, 7660
MH-47E	21,250, 9600	19,750, 8950	16,900, 7660

1. Mission:
-Warm-up, 8 min. @ idle power.
-Take-off/hover out-of-ground-effect 1 min @ T/O power.
-Cruise @ 100 KTAS for 30 nautical miles.
-Hover out-of-ground-effect 1 min.-Land/offload payload.
-Return 30 nautical miles @ best range speed.
-Land with 20 min reserve fuel.

2. Payloads are not normally practical for Medevac versions (UH-60Q and HH-60L); it is not possible to restrain maximum payload weight to the requirements of Table 37.

Table 41. Navy/Marine Corps rotary-wing aircraft internal load capabilities for 30 nautical mile radius

Helicopter [1]	Sea level, 60°F (lb, kg)	2,000 ft, 70°F (lb, kg)	4,000 ft, 95°F (lb, kg)
UH-1N	1,763 800	1,622 736	724 328
CH-46E	5,925 2688	5,955 2701	3,503 1589
CH-53D	12,749 5783	10,610 4813	4,860 2204
CH-53E	29,941 13 581	27,827 12 622	17,004 7713
MH-53E	27,261 12 365	26,441 11 993	20,190 9158
SH-60B	3,763 1707	3,802 1725	2,323 1054
SH-60F	5,589 2535	4,988 2263	3,028 1373
HH-60H	6,231 2826	5,631 2554	3672 1666
MV-22	16,029 7271	13,352 6056	9943 4510

1. Mission:
-Warm-up, 8 min. @ idle power.
-Take-off/hover out-of-ground-effect 1 min @ T/O power.
-Cruise @ 100 KTAS for 30 nautical miles with internal load.
-Hover out-of-ground-effect 1 min.
-Land/offload payload.
-Return 30 nautical miles @ best range speed.
-Land with 20 min reserve fuel.

paragraph 5.6.4) certifies equipment for internal transport on Army helicopters. NAVAIR certifies equipment for internal transport on Navy and Marine Corps helicopters.

5.6.3 External helicopter/tilt-wing transport.

Tables 42 and 43 give lift capabilities for Army cargo helicopters. Table 44 covers Navy/Marine cargo helicopters/tilt-wing aircraft. USAF helicopters have similar lift capabilities. NATICK (see paragraph 5.6.4) certifies equipment for external helicopter transport by Army, Navy, and Marine Corps helicopters/tilt-wing aircraft.

5.6.4 NATICK certification.

The U.S. Army Natick Soldier Center (NATICK) certifies all external helicopter sling loads (HSL) carried under DOD helicopters. Rigging uses standard sling sets adopted by each service. Spreader bars are rarely available or used and are considered only as a last resort in HSL. Contact NATICK [(508) 233-5276, DSN 256-5276] for details. In general HSL certification is based on:

a. An engineering evaluation of the proposed item's characteristics (weight/size/ flight shape), slinging provision suitability (location/strength), and compliance with the criteria in MIL-STD-913.

b. Proof-load testing of the slinging provisions.

c. Static lift testing to verify sling lengths and clearances.

d. Helicopter flight testing to determine the maximum stable airspeed and demonstrate maneuver stability during flight.

In general NATICK internal air transport certification is based on:

a. An engineering evaluation of the proposed item's characteristics (weight/size) and tiedown provision suitability (location/strength).

b. Proof-load testing of the tiedown provisions.

c. Validation test loading to verify tiedown and clearances.

5.7 Lifting and tiedown provisions.

5.7.1 General guidance.

New items of equipment, re-procurements of existing equipment, and modified equipment that meet the definition of a transportability problem item shall have lifting, tiedown, and for cargo carrying equipment, cargo tiedown provisions meeting the requirements of MIL-STD-209, *Interface Standard for Lifting and Tiedown Provisions.* MIL-STD-209 establishes the number, location, strength, dimensional, testing, and directional requirements of the lifting, equipment tiedown, and cargo tiedown provisions.

Table 42. Army rotary-wing aircraft external load capabilities for 30 nautical mile radius

Helicopter [1]	Cargo Hook Limit (lb, kg)	Sea level, 60°F (lb, kg)	2,000 ft, 70°F (lb, kg)	4,000 ft, 95°F (lb, kg)
UH-60A	9,000 4082	7,843 3550	7,302 3310	4,700 2130
UH-60L	9,000 4082	9,000 4082	9,000 4082	6,630 3000
MH-60K	9,000 4082	6,512 2950	5,640 2550	2,998 1350
CH-47D	26,000 (11 800) center 17,000 (7710) fwd/aft	23,324 10 580	23,396 10 610	16,644 7550
MH-47E	26,000 (11 800) center 17,000 (7710) fwd/aft	20,657 9370	19,171 8690	16,567 7510

1. Mission:
-Warm-up, 8 min. @ idle power.
-Take-off/hover out-of-ground-effect 1 min @ T/O power.
-Cruise @ 100 KTAS for 30 nautical miles with external load.
-Hover out-of-ground-effect 1 min.
-offload payload.
-Return 30 nautical miles @ best range speed.
-Land with 20 min reserve fuel.

Table 43. Army rotary-wing aircraft external load capabilities for maximum radius mission

Helicopter [1]	Sea level, 59°F		2,000 ft, 70°F		4,000 ft, 95°F	
	Payload (lb, kg)	Range (nm)	Payload (lb, kg)	Range (nm)	Payload (lb, kg)	Range (nm)
UH-60A	6,426 2910	113	5,832 2640	121	3,156 1430	136
UH-60L	8,490 3850	102	7,900 3580	108	5,173 2340	120
MH-60K	5,229 2370	94	4,306 1950	100	1,591 720	110
CH-47D	19,089 8650	129	19,089 8650	133	12,187 5525	144
MH-47E	17,516 7940	100	16,170 7330	100	13,659 6190	100
MH-47E [2]	9,658 4380	284	8,077 3660	291	5,425 2460	306

1. Mission:
-Warm-up, 8 min. @ idle power.
-Take-off/hover out-of-ground-effect 1 min @ T/O power.
-Cruise @ 100 KTAS with external load.
-Hover out-of-ground-effect 1 min.
-offload payload.
-Return @ best range speed.
-Land with 20 min reserve fuel.
2. With range extension tanks.

Table 44. Navy/Marine Corps rotary-wing aircraft external load capabilities for 30 nautical mile radius

Helicopter [1]	Sea level, 60°F (lb, kg)	2,000 ft, 70°F (lb, kg)	4,000 ft, 95°F (lb, kg)
UH-1N[2]	1,542 699	1,464 664	333 151
CH-46E	5,801 2631	5,268 2390	3,416 1549
CH-53D	12,568 5701	10,450 4740	4,718 2140
CH-53E	31,321 14 207	27,689 12 560	16,706 7578
MH-53E	27,179 12 328	26,376 11 964	20,087 9111
SH-60B	4,583 2079	4,172 1892	2,248 1020
SH-60F	5,505 2497	4,905 2225	2,948 1337
HH-60H	6,144 2787	5,546 2516	3,589 1628
MV-22	15,393 6982	12,641 5734	9,167 4158

1. Mission:
-Warm-up, 8 min. @ idle power.
-Take-off/hover out-of-ground-effect 1 min @ T/O power.
-Cruise @ 100 KTAS for 30 nautical miles with external load.
-Hover out-of-ground-effect 1 min.
-offload payload.
-Return 30 nautical miles @ best range speed.
-Land with 20 min reserve fuel.
2. Cruise w/external load at 65 KTAS. Insufficient power to cruise @ 100 KTAS.

Meeting these requirements ensures that military equipment can be safely and efficiently lifted or tied down for transport. The following paragraphs provide general guidance on lifting, tiedown and cargo tiedown provisions. Consult MIL-STD-209 for more detailed information on lifting and tiedown provisions.

5.7.2 Equipment tiedown provisions.

(1) Equipment tiedown provision strengths are based on the gross weight of the item/system.

(2) Equipment tiedown points should be located symmetrically about the item of equipment, preferably mounted on the front and rear ends, and higher than the center of gravity.

(3) Equipment tiedown provisions shall have the required strength to meet the directional load factors in MIL-STD-209. These forces are applied statically and independently. For design purposes, each tiedown provision shall be used for restraint in only one longitudinal direction, either fore or aft, and only one lateral direction, either left or right. Tiedown of equipment will be entirely by the tiedown provisions without depending on any blocking or brakes.

(4) Items/systems shall be equipped with four equipment tiedown provisions.

5.7.3 Lifting provisions.

(1) Required strengths for lifting provisions are based on the equipment gross weight and item's lift requirements (requirement for helicopter transport and crane lift).

(2) When locating lifting provisions the designer shall consider a range of sling angles that will be used for lifting in the field. The range to consider is as follows: Sling legs yielding a 45° equal length single apex sling assembly (with respect to the plane of the provisions) to those same length sling legs attached to an 8-foot by 20-foot container spreader bar. Sling legs are never less than 12 feet in length.

(3) Lifting provisions shall be located such that the item/system will not be damaged due to compressive forces exerted on the item through contact with a sling leg.

(4) Items/systems shall be equipped with four lifting provisions.

5.7.4 Multipurpose provisions.

A single provision can be used as both an equipment tiedown provision and a lifting provision as long as the requirements of both types of provisions are met.

5.7.5 Cargo tiedown provisions.

(1) All cargo carrying vehicles/platforms shall have cargo tiedown provisions.

(2) The number of cargo tiedown provisions shall be determined by the size of the cargo area.

(3) The strength of the cargo tiedown provisions is based on the maximum payload capacity of the cargo area.

5.7.6 Large cargo tiedown provisions.

(1) Equipment with a payload greater than 5,000 pounds shall be equipped with four large cargo tiedown provisions.

(2) Required strength of large cargo tiedowns is based on the maximum payload rating of the cargo area.

(3) The front and rear end of the cargo area must be equipped with either two or four large cargo tiedown provisions.

(4) If the cargo area is longer than 40 feet, then the cargo area shall be equipped with two rows of large cargo tiedown provisions (either two or four provisions in each row) along either side of the longitudinal centerline of the cargo area.

5.7.7 Supplemental air transport tiedown provisions.

(1) Equipment weighing over 10,000 pounds that requires transport on USAF cargo aircraft shall be equipped with supplemental air transport tiedown provisions. The requirement for supplemental air transport provisions is in addition to meeting the requirements for equipment tiedown provisions used for other modes of transport.

(2) The number of supplemental air transport tiedown provisions depends on the weight of the item, the strength of the provisions, and the directional capabilities of the provisions.

(3) The required strength for the supplemental air transport tiedown provisions shall be 10,000 or 20,000 pounds for vehicles suitable for C-130 transport, and 25,000 or 50,000 pounds for C-17/C-5 transport.

5.7.8 All provisions.

(1) Provisions that can be removed are prohibited. A tiedown or lifting provision that doubles as another device, such as a towing provision, shall not be used if the

secondary function requires removal of the provision.

(2) Shackles shall not be used as lifting, equipment tiedown, or multipurpose provisions unless they meet the requirements of an alloy, safety (bolt-pin) anchor shackle in RR-C-271D, and the nut is secured by welding.

(3) Height of lifting, equipment tiedown, and multipurpose provisions shall be between 2 and 6 feet, measured from the ground when the equipment is resting on a level surface, unless an integral means for reaching the provisions is provided.

(4) All lifting, tiedown, and cargo tiedown provisions shall be designed to prevent the movable parts from freezing in place during cold weather or from jamming because of accumulations of mud, paint, rust, and/or infrequent use.

(5) The use of spreader bars to meet the requirements of MIL-STD-209 is not allowed unless approved by SDDCTEA or the appropriate service transportability agent.

5.8 Intermodal cargo containers.

5.8.1 Classification and dimensions of cargo containers.
To take full advantage of the intermodal benefits of containerization, materiel should be transportable, when practical, in International Organization for Standardization (ISO) dry box or platform (flatrack) containers. Capacities and dimensional characteristics of ISO containers are shown in figure 29 and table 45. There are other nonstandard sizes of containers available in some countries, however to be capable of worldwide transport, containerized systems should utilize one of the containers listed in table 45. Container standards require the container floor to withstand a uniformly distributed load of not less than the maximum gross weight of the container. For series 1 AA, 1A, and 1C containers the floor must withstand a wheel load of not less than 6,000 pounds (2720 kg) per wheel, applied to a contact area of not greater than 22 square inches (14 2 cm^2), assuming a wheel width of not less than 7 inches (18 cm) and a distance between wheel centers of 30 inches (76 cm).

5.8.2 Designing for containerization.
In designing equipment for transport by ISO containers, there should be allowance for adequate clearance for the equipment to both fit inside the container and be tied down. The design criteria in table 46 allows for clearances to prevent S/E from contacting the door and/or walls of the container during loading. In addition, the item of equipment shall not exceed the container floor load limitations described in 5.8.1. Additional weight limitations may be imposed on item design, depending on the mode of transport involved. Container gross operating weights shall not exceed the weight limitations in table 47 when a fixed-wing aircraft transport requirement exists.

5.8.3 Rocket and missile containers.
Containers shall protect rockets or missiles in all environments encountered during

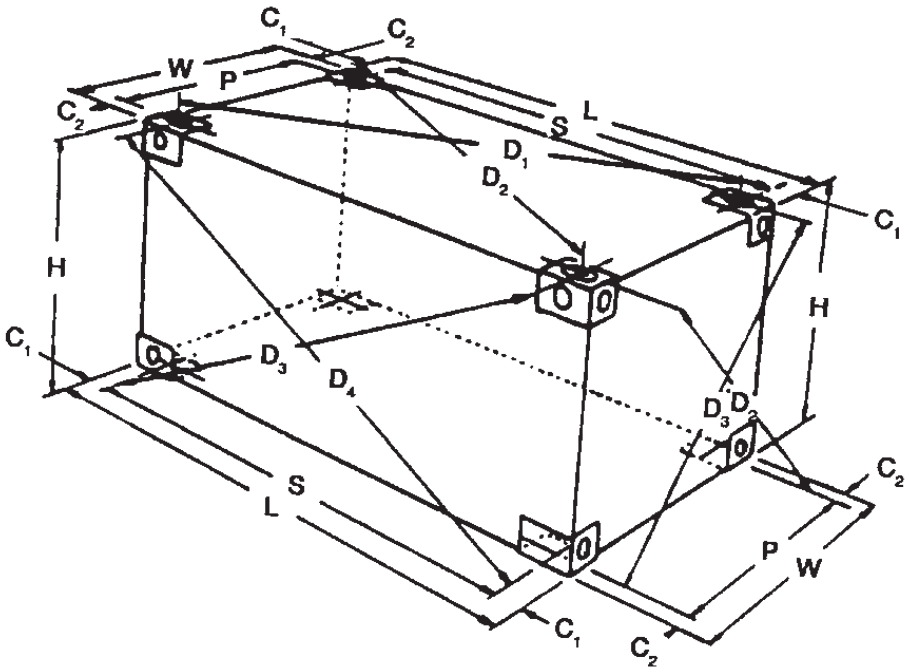

S = Length between centers of apertures in corner fittings
P = Width between centers of apertures in corner fittings
C1 = Corner fitting measurement 4 inches (105 mm)
C2 = Corner fitting measurement 3 ¾ inches (89 mm)
L = Overall External length of container
D = Distance between centers of apertures of diagonally opposite corner fittings resulting in 6 measurements: D1, D2, D3, D4, D5, and D6
K1 = Difference between D1 and D2 or between D3 and D4; i.e. K1=D1-D2 or K1 = D2-D1 or K1 = D3-D4 or K1 = D4-D3
K2 = Difference between D5 and D6; i.e. K2 = D5-D6 or D6-D5
H = Overall height

Nominal Length (feet)	Length Overall (L)		S [1]		P [1]		K_1 MAX		K_2 MAX	
	mm	ft-in.	mm	ft-in.	mm	ft-in.	mm	in.	mm	in.
40	12190	40' 0"	11985	39' 3-7/8"	2259	7' 4-31/32"	19	3/4	10	3/8
20	6055	19' 10-1/2"	5853	19' 2-7/16"	2259	7' 4-31/32"	13	1/2	10	3/8
10 [2]	2990	9' 9-3/4"	2787	9' 1-23/32"	2259	7' 4-31/32"	10	3/8	10	3/8
Width Overall (W): 8 ft. 0 in. (2435 mm) Height Overall (H): 8 ft. 0 in. (2435 mm), 8 ft. 6 ¾ in. (2600 mm), or 9 ft. 6 in. (2896 mm)										
1. Dimensions S and P are reference dimensions only. The tolerances to be applied to S and P are governed by the tolerances shown for the overall length (L) and overall width (W) 2. Not in general service.										

Figure 29. Container Dimensions.

Table 45. Dry cargo ISO containers

Container ISO Designation	Nominal Dimensions W by H by L (ft, m)	Actual Exterior Dimensions W by H by L (ft, m)	Approximate Interior Dimensions W by H by L (in., mm)	Door Opening W by H (in., mm)	Gross Weight Ratings (lb, kg)
1C	8 by 8 by 20 2.44 by 2.44 by 6.10	8 by 8 by 19.88 2.44 by 2.44 by 6.06	90.5 by 86.5 by 231 2299 by 2197 by 5867	90 by 84 2286 by 2134	52,900 23 995
1CC	8 by 8.5 by 20 2.44 by 2.59 by 6.10	8 by 8.54 by 19.88 2.44 by 2.60 by 6.06	90.5 by 92.5 by 231 2299 by 2350 b y 5867	90 by 89 2286 by 2134	52,900 23 995
1A	8 by 8 by 40 2.44 by 2.44 by 12.19	8 by 8 by 40.00	90.5 by 86.5 by 472.38 2299 by 2197 by 11 998	90 by 84 2286 by 2134	67,200 30 482
1AA	8 by 8.5 by 40 2.44 by 2.59 by 12.19	8 by 8.54 by 40.00 2.44 b y 2.60 by 12.19	90.5 by 92.5 by 472.38 2299 by 2350 by 11 998	90 by 89 2286 by 2261	67,200 30 482
1AAA [1]	8 by 9.5 by 40 2.44 by 2.90 by 12.19	8 by 9.51 by 40.00 2.44 by 2.90 by 12.19	90.5 by 104.67 by 472.50 2299 by 2659 by 12 002	90 by 102 2286 by 2591	67,200 30 482

1. This ISO container could be difficult to transport efficiently worldwide due to bridge and tunnel clearances.

Table 46. Design limits for equipment requiring transport in containers

External Container Dimensions (ft, m)	Maximum Item Dimensions			Gross Weight (lb, kg)
	Width (in., mm)	Height (in., mm)	Length (in., mm)	
8 by 8 by 20 2.44 by 2.44 by 6.10	85 2159	80 2032	219 5563	52,900 23 995
8 by 8.5 by 20 2.44 by 2.59 by 6.10	85 2159	85 2159	219 5563	52,900 23 995
8 by 8 by 40 2.44 by 2.44 by 12.19	85 2159	80 2032	460 11 684	67,200 30 482
8 by 8.5 by 40 2.44 by 2.59 by 12.19	85 2159	85 2159	460 11 684	67,200 30 482
8 by 9.5 by 40 2.44 by 2.90 by 12.19	85 2159	100 2540	460 11 684	67,200 30 482

Table 47. Maximum gross weight of container (fixed-wing)

Freight Container Designation	Maximum Gross Weight (lb, kg)
20-foot containers	45,000 20 412
40-foot containers	25,000 11 340

transportation, handling, and storage. See 4.6 for more information about transporting hazardous materials.

5.8.4 Flatracks.

This section addresses the ISO flatracks, FSS (35-foot (10.5 m)) flatracks, and the conventional containership (40-foot (12 m)) heavy-duty units. There are other flatracks available in varying sizes, configurations, and methods of employment. Flatracks are portable, open-top, open-side, 'tween-deck' (see 3.50) cargo-carrying platforms that fit into the standard cells of container-carrying ships (see fig 30). The heavy duty flatracks have approximately twice the cargo capacity of commercial flatracks. The FSS and heavy-duty flatracks provide the capability to stow vehicles, oversized equipment, and breakbulk cargo that cannot be placed into containers. Heavy-duty and FSS flatracks are provided with wood flooring and recessed 70,000-pound (310 kN) capacity D-rings for securing cargo.

5.8.4.1 ISO flatracks.

ISO flatracks are intended for transport of long or awkward to handle items such as drums, coils, pipes, and long crates. ISO flatracks may have either open or paneled end walls. Ammunition shipments require that the end wall be paneled. ISO flatracks are available with both folding and fixed end frames. The external dimensions and capacities are the same as shown for containers in table 45.

5.8.4.2 FSS flatracks.

The FSS flatracks have a maximum gross weight of 55,000 pounds (25 mton). The FSS (35-foot (10.5 m)) flatracks were produced in three types to maximize the cargo capacity of the ships. Flatrack weight and dimensional limitations are provided in table 48. When designing an item/system for transport in FSS flatracks, the item/system weight and dimensions shall not exceed the limitations given in table 48.

5.8.4.3 Heavy duty flatracks.

The general characteristics of the 40-foot (12 m) heavy-duty flatrack are as shown below. When designing an item/system for transport in the 40-foot (12 m) heavy-duty flatracks, the item/system weight and dimensions shall not exceed the maximum internal limitations cited in this paragraph.

External Dimensions:

Length 40 feet 0 inch (1220 cm)
Width 8 feet 0 inch (244 cm)
Height 13 feet 0 inch (396 cm) *

*Some heavy duty flatracks have adjustable endposts allowing a cargo height range from 8 feet 6 inches to 13 feet 0 inch.

Internal Dimensions: (cargo maximums)

Length 38 feet 6 inches (1173 cm)

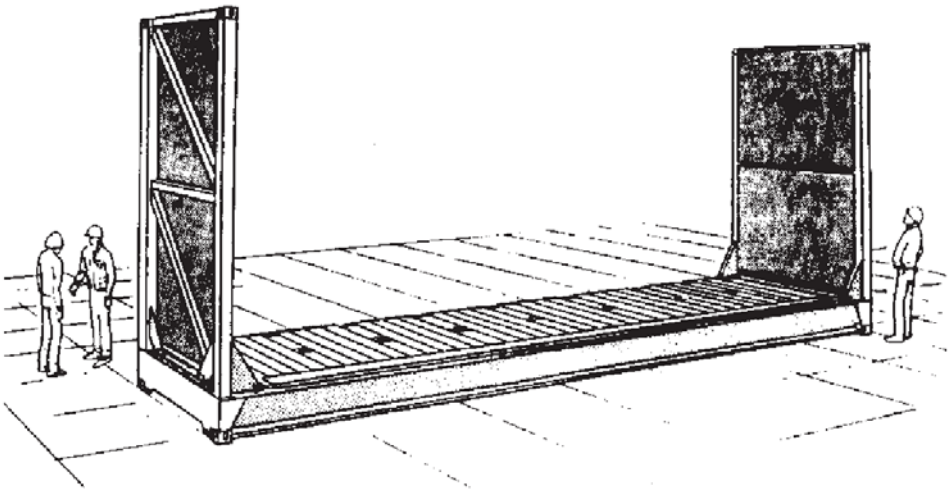

35-foot open-top, open-sided flatrack

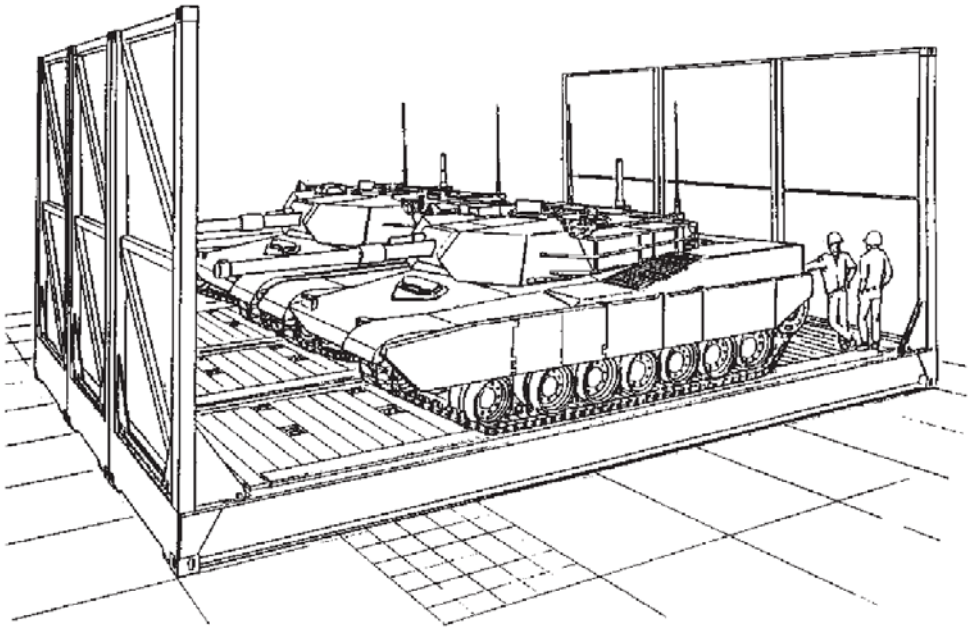

Flatracks used as a temporary ‘tween’ deck

Figure 30. FSS Flatrack.

Table 48. FSS flatracks, dimensions, weight and capacities

	Type I	Type II	Type III
Quantity aboard	53	22	3
Dimensions (External) Length (ft, m) Width (ft, m) Height (clear) (ft, m)	35.00, 10.67 8.00, 2.44 15.25, 4.65	35.00, 10.67 8.00, 2.44 12.00, 3.66	35.00, 10.67 8.00, 2.44 10.25, 3.12
Dimensions (Internal), or Maximum cargo size Length (ft, m) Width (ft, m) Height (clear) (ft, m)	33.75, 10.29 8.00, 2.44 13.50, 4.11	33.75, 10.29 8.00, 2.44 10.25, 3.12	33.75, 10.29 8.00, 2.44 8.50, 2.59
Weight of flatrack (lb, kg)	19,300, 8754	17,841, 8093	17,511 7943
Area per flatrack (sq ft, m^2)	270, 25.08	270, 25.08	270, 25.08
Volume per flatrack (cu ft, m^3)	3,645 103.22	2,768 78.38	2,295 64.99
Weight capacities Lifting [1] (lb, kg) Maximum [2] (lb, kg)	35,700 16 193 134,000 60 782	37,159 16 855 134,000 60 782	37,489 17 005 134,000 60 782

1. The maximum weight that can be placed on a flatrack that is to be lifted with a 35-ft (10.67 m) container lifting spreader.
2. The actual weight that can be placed on a flatrack that has been positioned in a cargo hold.

Width 8 feet 0 inch (244 cm)
Height 10 feet 6 inches (320 cm)

Flatrack weight (nominal): 18,000 pounds (8165 kg)
Maximum cargo weight: 144,000 pounds (65 318 kg)
Maximum point load: 190 psi (1.3 mPa)
Maximum uniform load: 525 psf (2563 kg/m^2)

NOTE: The maximum gross lifting weight of a heavy-duty flatrack, using a 40-foot (12.19 m) spreader is 67,200 (30 480 kg) pounds.

5.8.6 Load Handling System (LHS) flatracks.

The palletized load system (PLS) and HEMTT LHS has an integral load handling system (LHS) capable of loading and unloading flatracks onto the PLS truck and trailer or HEMTT LHS. Currently, there are three flatracks that are compatible with the PLS; the M1077, M1, and M3 (Container Roll-in/Out Platform (CROP)) flatracks. The PLS flatracks comply with the requirements of the Interoperable Flatrack Main Dimensions

drawing of NATO STANAG 2413 and can be loaded, transported and unloaded using the LHSs of the partner nations' vehicles. The partner nations are the United States, France, Germany, and the United Kingdom. Payloads on other than the PLS truck and trailer will be reduced and limited by the vehicle's LHS payload and rating.

5.8.6.1 Palletized Load System (PLS) M1077 flatrack.

The M1077 flatrack is typically referred to as the A-frame flatrack. The M1077 is equipped with ISO corner fittings and can transport a 20-foot (6.10 m) ISO container at a maximum weight of 33,060 pounds.

External Dimensions:	Length	240 inches	610 cm
	Width	96 inches	244 cm
	Height	68.4 inches	174 cm
Internal Dimensions:	Length	230.4 inches	585 cm
(cargo maximums, other than	Width	90.5 inches	230 cm
ISO container)	Height	72.3 inches	184 cm
Tare weight:		3,190 pounds	1,447 kg
Gross weight:		36,250 pounds	16,443 kg

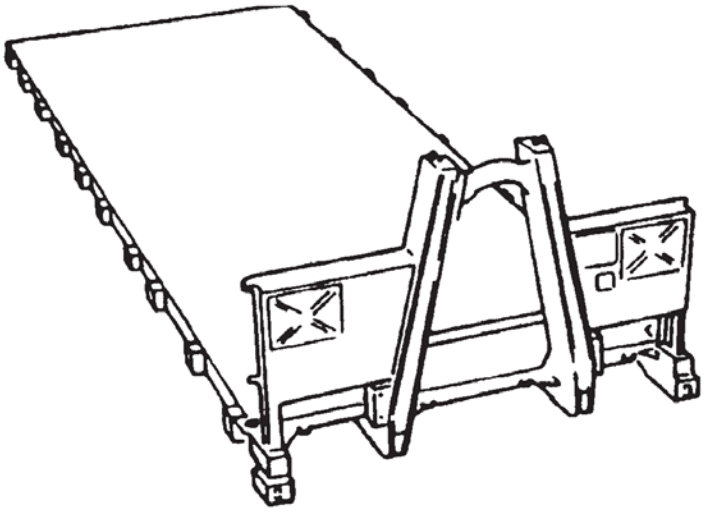

M1077 (A-frame) Flatrack

5.8.6.2 PLS M1 flatracks.

The M1 flatrack is transportable throughout the intermodal system as a flatrack or on the PLS truck without the use of additional equipment.

External Dimensions:	Length	240 inches	610 cm
	Width	96 inches	244 cm
	Height	82 inches	208 cm
Internal Dimensions:	Length	228 inches	579 cm
(cargo maximums)	Width	96 inches	244 cm
	Height	70 inches	178 cm
Tare weight:		7,300 pounds	3,311 kg
Gross weight:		36,250 pounds	16,443 kg

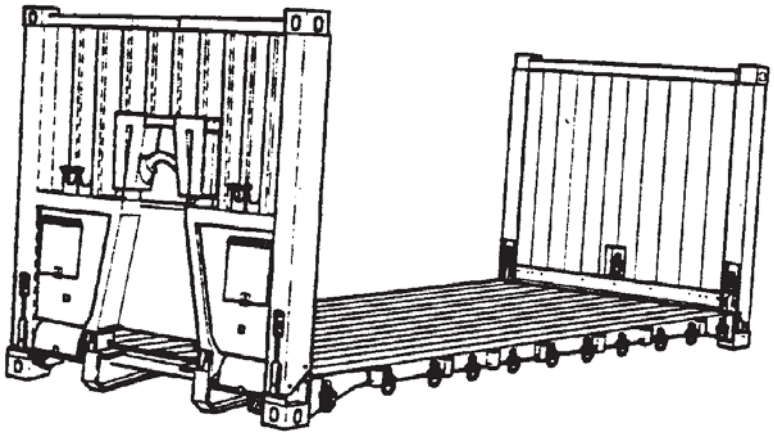

M1 (Intermodal) Flatrack

5.8.6.3 PLS M3 flatracks (CROP).

The M3 or CROP is a cargo-carrying platform capable of being transported on the PLS truck and trailer and inside any ISO 1 CC dry cargo container.

External Dimensions:	Length	230 inches	584 cm
	Width	91.5 inches	232 cm
	Height	10.5 inches	26.7 cm (to top of deck)
Internal Dimensions:	Length	217 inches	551 cm
(cargo maximums)	Width	89 inches	226 cm
	Height	74 inches	188 cm
Tare weight:		4,000 pounds	1,814 kg
Gross weight:		36,250 pounds	16,443 kg

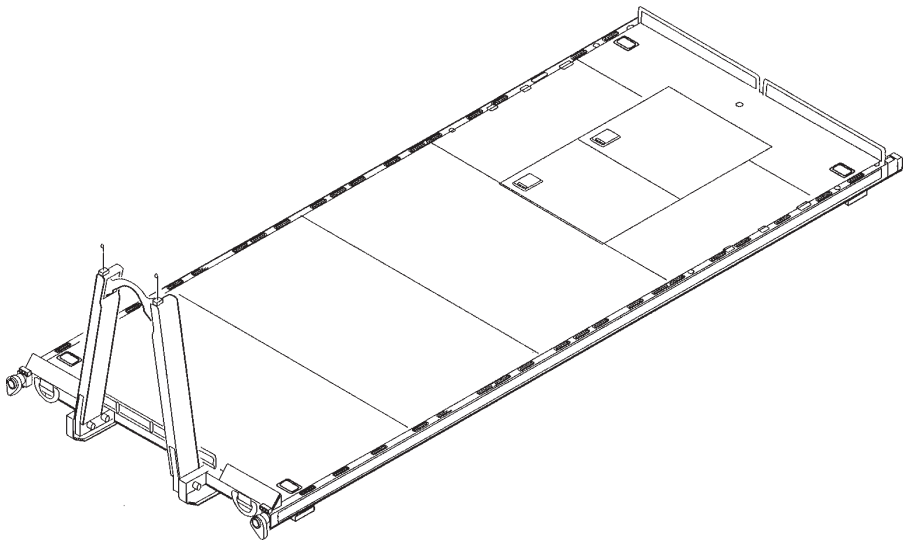

M3 and M3A1 (CROP) Flatrack

5.9 Shelters.

5.9.1 General.

A rigid wall shelter is a transportable facility designed and constructed to house equipment, such as electronics and communication systems, shop sets, medical equipment, and so forth. These shelters see widespread use and are exposed to multiple forms of transportation, which result in shelters being the primary interface for a system's mobility. The DoD Joint Committee on Tactical Shelters (JOCOTAS) has recognized a limited number of shelters as standard and acceptable for DoD use. These shelters are identified in the Defense Acquisition Deskbook under "JOCOTAS". General design, construction and test criteria for DoD shelters are described in ASTM E 1925, *Engineering and Design Criteria for Rigid Wall Relocatable Structures*. Specific performance, interface, and fabrication details are found in ASTM specifications for each shelter type. Nonstandard shelters have not been demonstrated to be suitable for transport within the DTS.

5.9.1.1 S-250 shelter.

Weight and dimensional characteristics of the S-250 shelter are given in figure 31.

5.9.1.2 Lightweight multipurpose shelter (LMS), S-788.

The LMS is an empty shelter for use on the HMMWV (M1037, M1097, M1113, M1152A1) which has been produced in two types. The Type I is a basic shelter with personnel door, door access ladder, HMMWV mounting kit, and pintle extension. The Type III shelter is modified to include a tunnel across the front of the shelter for

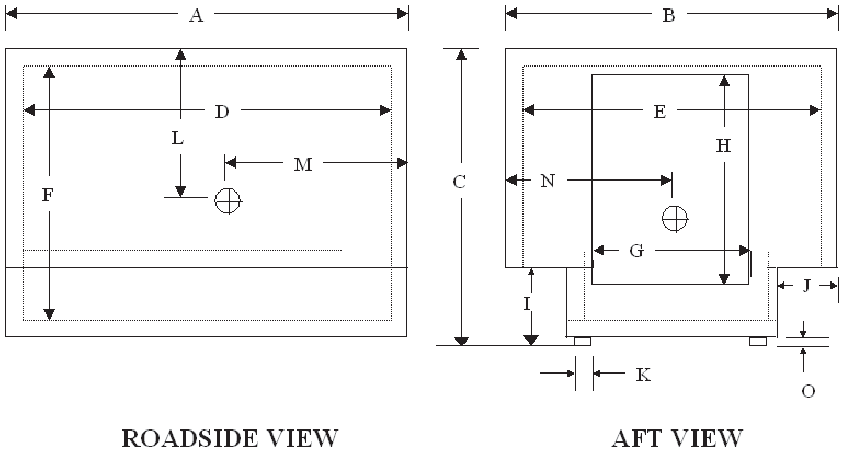

Empty Weight: 770 lb, 349 kg
Gross Weight: 3,330 lb, 1211 kg
Lifting and Tiedown Provision Capacity: 5,000 lb, 2268 kg

Shelter Dimensional Data (dimensions in inches and mm)

Nomenclature	A	B	C	D	E	F	G	H	I	J	K	L	M	N	O
S-250/G	85 5/8 2175	79 1/16 2008	70 1/8 1781	78 1/16 1983	75 3/32 1907	64 3/32 1628	30 762	55 1397	19 9/32 490	15 7/32 387	3 1/2 89	37 940	36 914	39 991	2 3/32 53

Figure 31. S-250 shelter.

mounting an auxiliary power unit. The LMS types are described in Figure 32. The LMS configuration has been the basis of the production of three versions of the SICPS Rigid Wall Integrated Shelter.

NSN: 5411-01-333-0663 S-787/G Shelter, Non-Expandable, Rigid Wall, Integrated (SICPS Rigid Wall Shelter - Version 1)

NSN: 5411-01-436-3326 S-832/G Shelter, Non-Expandable, Rigid Wall, Integrated (SICPS Rigid Wall Shelter - Version 4)

NSN: 5411-01-494-7124 S-842/G Shelter, Non-Expandable, Rigid Wall, Integrated (SICPS Rigid Wall Shelter - Version 5)

The integrated shelter payload must meet the requirements of both the LMS payload and the HMMWV total payload and individual axle load ratings.

5.9.1.3 S-280 shelter.

Weight and dimensional characteristics of the S-280 shelter are given in figure 33.

5.9.1.4 ISO Shelter.

Weight and dimensional characteristics for the ISO shelter are given in Figure 34. ISO shelters are tested and certified by the Convention for Safe Containers (CSC). Shelters built to dimensions other than ISO standard are not truly ISO shelters, even when ISO corner fittings are provided. These shelters do not match with the ISO transportation equipment. Lifting and tiedown provisions IAW MIL-STD-209 should be used on all shelters not matching ISO dimensional standards.

5.9.2 Shelter transportability and certification.

Standard DOD shelters are designed and tested to be safely transported at their maximum rated payload. DOD systems housed in shelters and designed for movement by any mode of transport must stay within the payload limitations imposed by the shelter, prime-mover, and transport equipment. Staying within these payload capabilities promotes safe transport, reduces potential damage to mission equipment, prime-mover, shelter, and transport equipment, and reduces prime-mover and transporter maintenance requirements. When determining the system payload and/or gross weight of the prime mover, the system developer must consider all associated items of equipment that are transported with the item or system, as well as crew members, their equipment, and trailer tongue weights. Consistent with the definition of gross weight and vehicle payload, associated items of equipment may include such items as camouflage, concertina wire, tents, extra fuel, water, spreader bar assemblies, and tools and spare parts.

5.9.2 NATICK certification.

The US Army Natick Soldier Center (NATICK) is the DoD certification authority for shelter transportability and overload. Contact NATICK via e-mail (AMSSB-RSC-B@natick.army.mil) for details. In general, shelter certification is based on:

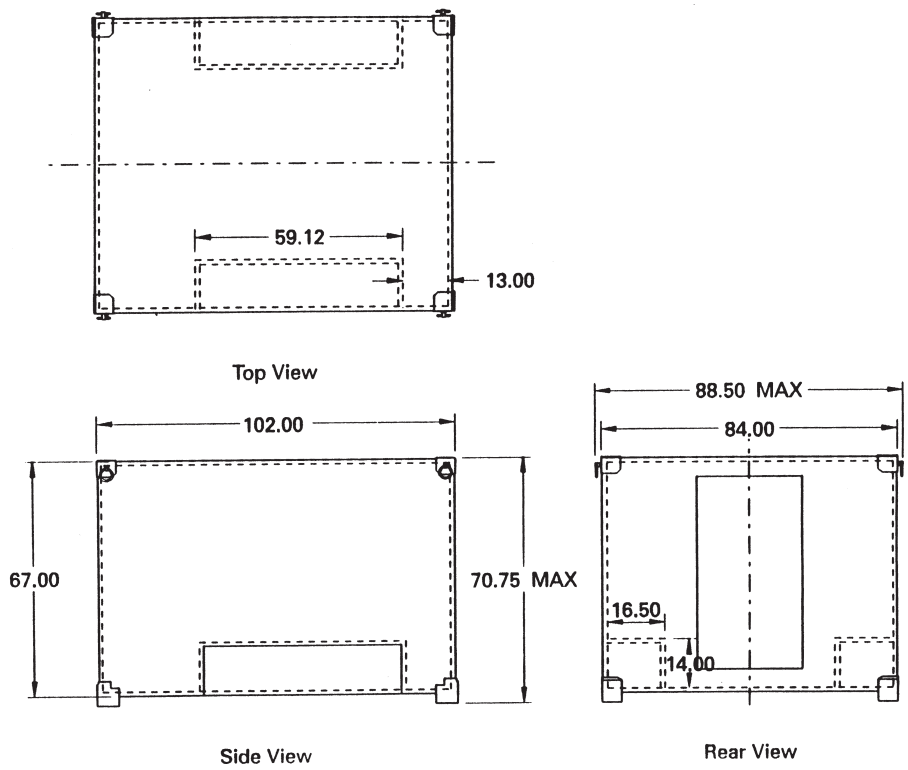

Type	NSN	Tare Weight without mounting kit (lb)	Tare Weight with mounting kit and pintle extender (lb) [1]	Payload (lb)	Description
I	5411-01-357-3582	608	746	3,300	The basic shelter consists of the shelter structure with personnel door, a door access ladder for when the shelter is mounted on a host vehicle, a drain plug in the floor of the shelter, front and rear vehicle mounts with hardware, inserts for attachment of a bootwall, roof-edge doubler plate, and fold out steps on the side wall.
II	5411-01-357-3583	643	781	3,300	Shelter modified. This shelter includes everything contained in the type I basic shelter and in addition, a 29-inch wide by 33-inch high tunnel across the bottom front of the shelter with openings on each side.

1. The mounting kit weighs 88 pounds and the pintle extender weighs 50 pounds.

Figure 32. Lightweight Multipurpose Shelter, S-788.

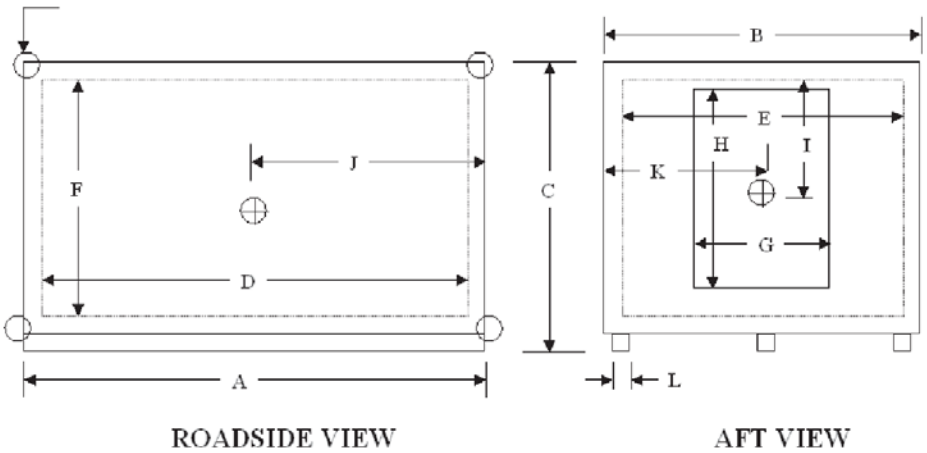

Shelter Dimensional and Weight Data (Dimensions in inches and mm)

Nomenclature	A	B	C	D	E	F	G	H	I	J	K	L
S-280/G, A/G	147 3734	87 2210	83 3/8 2118	138 3505	81 3/4 2076	74 3/4 1899	35 889	64 3/4 1645	47 1194	71 1803	44 1118	4 102
S-280C/G	147 3734	87 2210	86 3/8 2194	138 3505	81 3/4 2076	77 1/8 1959	35 889	64 3/4 1645	55 1397	68 1727	44 1118	4 102

	S-280/G, A/G, B/G (lb, kg)	**S-280 C/G (lb, kg)**
Empty weight	1,380 626	1,400 635
Gross weight	6,380 2894	8,500 3856
Lifting and tiedown provision capacity	11,000 4990	14,400 6532

Figure 33. S-280 shelter (MIL-S-55286).

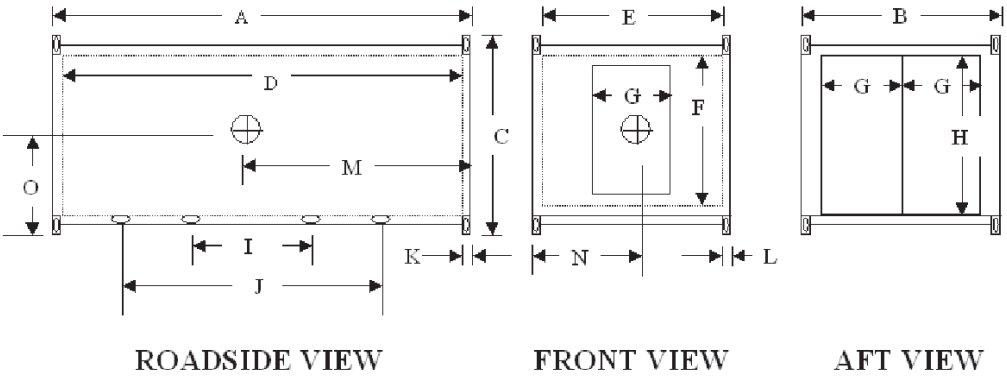

ISO Shelter Shipping Mode Dimensions (inches and mm)

Nomenclature	A	B	C	D	E	F	G	H	I	J	K	L	M	N	O
Non expandable	238.5 6058	96 2438	96 2438	229.3 5824	90.8 2306	85.3 2167	36 914	80 2032	34 864	82.5 2096	7 178	6.3 160	120 3048	49 1245	42 1067
1 side expandable	238.5 6058	96 2438	96 2438	229.3 5824	84 2134	85.3 2167	36 914	80 2032	34 864	82.5 2096	7 178	6.3 160	121 3073	59 1499	46 1168
2 side expandable	238.5 6058	96 2438	96 2438	229.3 5824	77.8 1976	85.3 2167	36 914	88 2032	34 864	82.5 2096	7 178	6.3 160	122 3099	49 1245	48 1219

Shipping Mode	Non-expandable (lb, kg)	1-side expandable (lb, kg)	2-side expandable (lb, kg)
Empty Weight	3,860 1751	5,520 2504	6,950 3153
Payload	11,140 5053	9,480 4300	8,050 3651
Total	15,000 6804	15,000 6804	15,000 6804

Figure 34. ISO shelter.

a. An engineering evaluation of the modifications to the shelter used to house the proposed system.

b. Evaluation of the test plan and results.

5.9.3 Shelter modifications.

In many cases, a system developer is required to modify a standard shelter during system integration. These modifications typically include wall cutouts for environmental control equipment, electronics interface, and the installation of racks. These systems may be required to conduct shelter transportability certification testing, depending upon the extent to which the shelter is modified and the transport modes required for the system's movement. The system's transportability report should highlight any shelter modifications so the transportability analysis can recommend when additional testing is required. Particular consideration should be given to the use of the Army Standard Family of ISO Shelters and other DOD ISO shelters. Modifications to these types of shelters may require ISO recertification before they will be shipped by commercial modes. Modifications to ISO shelters may affect structural characteristics and their ability to meet loads imposed by shipping (i.e. stacking 6 or 9 high in container ships). Shelter modification drawings must be reviewed by a Coast Guard approved inspection agency (check Convention for Safe Containers (CSC) certification plate for agency) for a determination of recertification. Retesting may be required in some cases.

5.9.4 Nonstandard shelters.

Any use of a shelter not included in the DOD inventory of standard shelters must be approved by the Joint Committee on Tactical Shelters (JOCOTAS). Shelters bought off the GSA schedule may not meet all of its transportability requirements. Therefore, neither a shelter transportability certification nor transportability approval will be granted unless approval from JOCOTAS is obtained. Shelters must be compatible with the cargo bed and cargo tiedown provisions of the planned transport vehicle. Lifting and tiedown provision testing and rail impact testing with the shelter at gross weight with operational equipment installed is typically required to ensure the shelter can be adequately restrained for transport and has the structural integrity for transport within the DTS. System Developers should contact their JOCOTAS service representatives for guidance in the use of nonstandard shelters. Service representatives can be found by contacting the U.S. Army Natick Soldier Center, ATTN: AMSSB-RSC-B, Kansas Street, Natick, MA 01760, DSN 256-4347 or (508) 233-4347.

Converting ISO shipping containers (aka. CONEX's) to serve a shelter function is becoming more commonplace. For simplicity, an ISO shipping container is considered to be converted to a shelter if it is used for anything other than transporting bulk cargo from one location to another. If an ISO shipping container is converted to serve as a shelter, JOCOTAS does not need to waive its use. However, a shelter tranpsortability certification is still required (see paragraph 5.9.2.1).

5.10 Overloads.

5.10.1 General.

Items of equipment developed for movement by any mode of transport should meet the payload limitations imposed by the transport equipment. Staying within the payload capabilities of the transport equipment promotes safe transport, reduces potential damage to transport equipment, and reduces transporter maintenance requirements. When determining the payload and/or gross weight of the transport equipment, the designer must consider all associated items of equipment that are transported with the item or system. Consistent with the definition of gross weight and vehicle payload, associated items of equipment may include such items as camouflage, concertina, tents, extra fuel, water, spreader bar assemblies, and tools and spare parts.

5.10.2 Overload prevention.

Procedures for preventing overloads are found in MIL-HDBK-910. It describes shelters, trailers, vehicles, and their interaction in determining accurate system payloads and identifying areas where overload situations exist.

5.10.3 Other prime mover overload considerations.

For S/E requiring highway transport, the following prime mover characteristics shall not be exceeded. They are: towed load allowance for a cargo truck or truck tractor pintle, towed load allowance for a truck tractor fifth wheel receptacle, vertical pintle load allowance, fifth wheel receptacle vertical load allowance, and prime mover vehicle weight and axle ratings.

5.10.4 Designing for transport.

Unless otherwise specified, new items of equipment shall be designed such that their weight does not exceed the payload capabilities of the required transport equipment. When an item of equipment/system is designed for transport by specific transport equipment, the item/system shall meet requirements to prevent overloads.

5.11 Assembly/disassembly.

5.11.1 General.

The objective of transportability design is to ensure developed items of equipment are capable of rapid and efficient deployment by all required transport modes. Large and heavy items of equipment may not meet weight and dimensional transport limitations, thereby requiring alternate routing, special procedures, and/or disassembly for transport. This can cause unnecessary delays during item transport, costly delays for receiving units, and use of valuable time to reassemble the item. When practical, an item of equipment should be designed such that transport can be achieved without major disassembly of the item.

5.11.2 Transportability design for assembly/disassembly.

Unless otherwise required by the combat developer (CBTDEV), S/E to be used in the initial support of forces deployed in a contingency operation, including supply by air, shall be operational immediately, except for selected engineer construction equipment, which must be capable of employment within 1 hour. Removed items should be stowed on the S/E or be transported on the same vehicle/aircraft to ensure the S/E can be quickly reassembled at the destination.

6. NOTES.

This section contains information of a general or explanatory nature that may be helpful, but is not mandatory.

6.1 Intended use.

This standard is intended for use as an element of the overall engineering for transportability program as both design and evaluation criteria for the development of DOD systems and equipment.

6.2 Issue of DODISS.

When this standard is used in acquisition, the issue of the DODISS applicable to the solicitation should be cited (see 2.1.1and 2.1.2).

6.3 Data requirements.

Data Item Description (DID) DI-PACK-80880, Transportability Report, should be listed on the Contract Data Requirements List (DD Form 1423) when this standard is applied on a contract to obtain the data.

6.4 Subject term (key word) listing.

Approval, transportability Criteria
Engineering, transportability
Cargo tiedown provision
Lifting
Military standards
Provision, lifting
Provision, tiedown
Report, transportability
Supplemental air transport tiedown provision
Tiedowns
Transport, air
Transport, highway
Transport, rail
Transport, water
Transportability
Transportability engineering analysis Transportability problem item

6.5 International standardization agreements.

Certain provisions of this standard are the subject of international standardization agreements (STANAG 2021, STANAG 3400, STANAG 3542, STANAG 3548, STANAG 3854, STANAG 4062, A MOV P-4, QSTAG 328, AIR STD 44/9, AIR STD 44/12 and AIR STD 44/21). When a change notice, revision, or cancellation of this standard is proposed that will modify the international agreements concerned, the preparing activity for this standard will take appropriate action through international standardization channels, including departmental standardization offices, to change the STANAG(s) or make other appropriate accommodations.

6.6 Changes from previous issue.

Marginal notations are not used in this revision to identify changes with respect to the previous issue due to the extent of the changes.

Appendix
Sample Problem for determining Bridge Formula Requirements

A.1 Scope.
This appendix establishes a sample application of the bridge formula.

A.2 Applicable documents.
This section is not applicable to this appendix.

A.3 Symbols.
As stated in paragraph 5.1.2.2, the following letter symbols apply.

W = overall gross weight on any group of two or more consecutive axles to the nearest 500 pounds.

L = distance in feet between the extreme of any group of two or more consecutive axles.

N = number of axles in the group under consideration.

A.4 General requirements.
None.

A.5 Detailed requirements.

A.5.1 Example.
See figure 35. For a vehicle with weights and axle dimensions as shown in this figure, bridge formula requirements are determined as follows.

A.5.1.1
Determine axle combinations to be analyzed. The contractor and/or MATDEV must determine bridge formula requirements for all axle combinations. For the example in figure 35, the possible axle combinations are:

1 through 2	2 through 4
1 through 3	2 through 5
1 through 4	3 through 4
1 through 5	3 through 5
2 through 3	4 through 5

Bridge formula requirements must be met for all of these combinations.

A.5.1.2 Using bridge formula, determine maximum allowable loading for each axle combination.

a. For the single axle (axle 1), tandem axles (axles 2-3 and 4-5), and vehicle gross weight (axles 1-5); the actual axle loads must not exceed 20,000 pounds, 34,000 pounds, and 80,000 pounds, respectively. Please note that the bridge gross weight formula defines a tandem axle as two or more consecutive axles whose centers may be included between parallel vertical planes spaced more than 40 inches and not more than 96 inches apart, extending across the full width of the vehicle. In figure 35, axle groupings 2 through 3 and 4 through 5 are each spaced 4 feet apart. Therefore, these two axle groupings are both tandem axles. As shown in the figure, the actual axle loads for the single axle, tandem axles, and gross weight are 12,000 pounds, 34,000 pounds (for both 2-3 and 4-5), and 80,000 pounds, respectively. Hence, the bridge formula is not exceeded for these combinations.

b. For the other axle combinations, the following calculation shows an example of a bridge formula calculation. This calculation is for the axle combination 1 through 3.

$W = 500\ (LN/(N-1) + 12N + 36)$

$W = 500\ [(21 \times 3)/(3 - 1) + (12 \times 3) + 36]$

W = 51,500 pounds (rounded to nearest 500 pounds)

This is the maximum allowable load for axles 1 through 3 under the bridge formula. All other axle combinations would be computed similarly to this.

c. Compare maximum allowable loading to actual loading:

For axle combinations 1 through 3:

W actual = 12,000 + 17,000 + 17,000 = 46,000 pounds

For this axle combination, W actual (46,000 pounds) < W maximum (51,500 pounds).

Hence, the bridge formula is met for axle combination 1 through 3.

d. Using the bridge formula, the maximum allowable loading for each of the possible axle combinations for this example are (see A.5.1.1):

1 through 2 =	47,000 pounds	2 through 4	=58,500 pounds
1 through 3 =	51,500 pounds	2 through 5	=64,500 pounds
1 through 4 =	73,500 pounds	3 through 4	=56,000 pounds
1 through 5 =	80,000 pounds*	3 through 5	=58,500 pounds
2 through 3 =	34,000 pounds*	4 through 5	=34,000 pounds**

* Maximum allowable gross weight.
** Maximum allowable for tandem axle.

e. There is one exception to the bridge formula. Two consecutive sets of tandem axles may carry a gross load of 34,000 pounds each providing the overall distance between the first and last axles of such consecutive sets of tandem axles is 36 feet or more. In figure 35, the distance between the first axle of grouping 2 through 3 and the last axle of 4 through 5 is 34 feet. Hence, this example does not meet the exception.

f. Please note that for this example: For axle combination 2 through 5 W actual (68,000 pounds) > W maximum (64,500 pounds). Therefore, the example in figure 35 does not meet the bridge formula because the loading for axle combination 2 through 5 exceeds the bridge formula allowable.

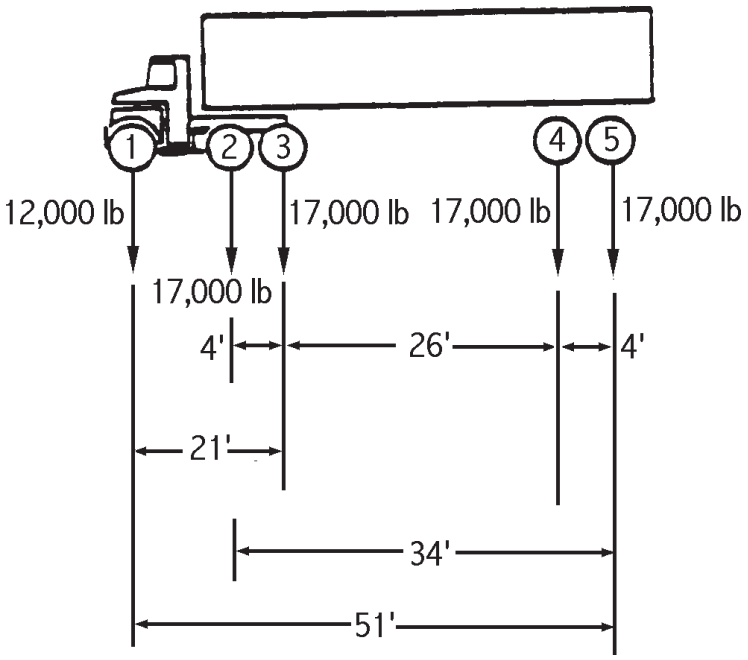

Figure 35. Sample case for determining bridge formula requirements.

Custodian:
Army - MT
Navy - SA
Air Force – 11

Preparing Activity:
Army – MT

Project No. Pack - 1142

Review activities:
Army - CR3, PT, SM, TM2
Navy - AS, CG, NP, TD
Air Force - 13
DLA - CC, DH, GS
Other - SE, SP

NOTE: The activities listed above were interested in this document as of the date of this document. Since organizations and responsibilities can change, you should verify the currency of the information above using the ASSIST Online database at http://assist.daps.dla.mil.